PORTER®

NITROGEN GAS SPRINGS

DESIGNED AND MANUFACTURED IN THE UK

BY

METROL

NITRO-SPRINGS

The engineers choice

PORTER®

MANIFOLD SYSTEMS

CYLINDERS AND ACCESSORIES

METROL

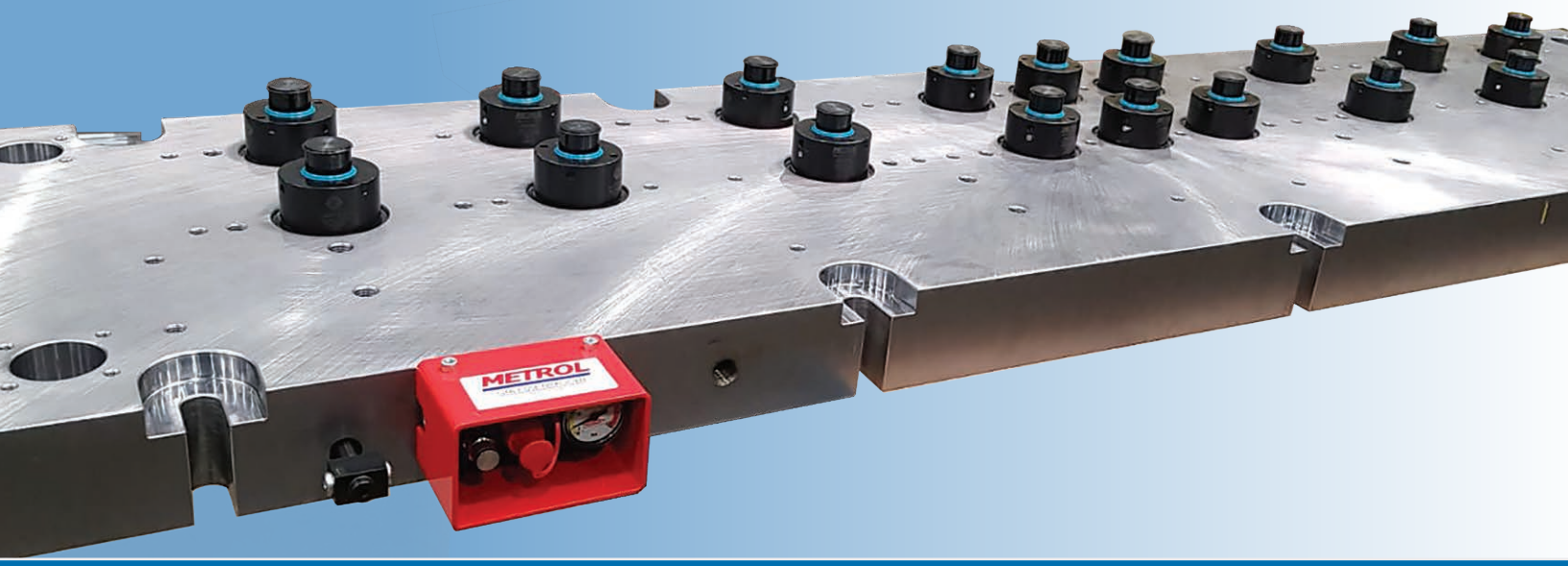

CONTACT FACTORY FOR MORE INFORMATION

HOSELESS BASE PLATE SYSTEMS

- Manufactured to Customer Specifications
- No External Hoses
- Reduces Leak Points
- Special BP Seal Designed for Maximum Durability

PRESS CUSHIONS

Designed and Manufactured to fit your application, speed and conditions

CONTACT FACTORY FOR MORE INFORMATION

PORTER

INITIAL FORCE	ISNG	PLJ	PL	EX	G-EX	T-EX	MX	DSNG	HDG	MINI	EJECTORS	DIA.	STROKE
5.7 - 170 *13 - 382*											**MNE16** **MNE24**	**12 - 20** *0.47 - 0.79*	**10 - 125** *0.39 - 4.92*
13 - 170 *29 - 382*				**EX0170**						**MS12** **MS15** **NG0** **NG1** **NG2**		**12 - 32** *0.47 - 1.26*	**7 - 200** *0.28 - 7.87*
265 - 320 *596 - 719*	**ISNG0250**	**PLJ0300**	**PL0300**	**EX0320**								**25 - 38** *0.98 - 1.50*	**7 - 125** *0.28 - 4.92*
360 - 425 *809 - 955*				**EX0360**	**G-EX0360**				**HDG0042**			**25 - 32** *0.98 - 1.26*	**6 - 125** *0.24 - 4.92*
470 - 740 *1057 - 1664*	**ISNG0500**	**PLJ0500**	**PL0500**	**EX0500**	**G-EX0500**				**HDG007**			**32 - 45** *1.26 - 1.77*	**6 - 160** *0.24 - 6.30*
740 *1664*	**ISNG0750**	**PLJ0750**	**PL0750**	**EX0750**	**G-EX0750**							**45 - 50** *1.77 - 1.97*	**10 - 300** *0.39 - 11.81*
920 - 1060 *2068 - 2383*				**EX1000**	**G-EX1000**	**T-EX1000**	**MX1000**		**HDG010**			**38 - 50** *1.50 - 1.97*	**6 - 300** *0.24 - 11.81*
1500 - 1800 *3372 - 4047*	**ISNG1500**			**EX1500**	**G-EX1500**	**T-EX1500**		**DSNG1500**	**HDG018**			**50 - 75** *1.97 - 2.95*	**6 - 300** *0.24 - 11.81*
2400 - 2950 *5395 - 6632*				**EX2400**	**G-EX2400**	**T-EX2400**	**MX2400**		**HDG029**			**63 - 75** *2.48 - 2.95*	**10 - 300** *0.39 - 11.81*
3000 *6744*	**ISNG3000**							**DSNG3000**				**95** *3.74*	**25 - 300** *0.98 - 11.81*
4200 - 4700 *9442 - 10566*				**EX4200**	**G-EX4200**	**T-EX4200**	**MX4200**		**HDG047**			**75 - 95** *2.95 - 3.74*	**10 - 300** *0.39 - 11.81*
5000 - 6630 *11240 - 14905*	**ISNG5000**			**EX6600**	**G-EX6600**	**T-EX6600**	**MX6600**	**DSNG5000**				**120** *4.72*	**16 - 300** *0.63 - 11.81*
7500 - 9500 *16861 - 21357*	**ISNG7500**			**EX9500**		**T-EX9500**	**MX9500**	**DSNG7500**	**HDG075**			**95 - 150** *3.74 - 5.91*	**10 - 300** *0.39 - 11.81*
10000+ *22481+*	**ISNG10000**	**RSNG10000**							**HDG118**			**120 - 195** *4.72 - 7.68*	**10 - 300** *0.39 - 11.81*

GAS SPRING SELECTION GUIDE

SERIES	DESCRIPTION	MODELS	STROKE LENGTHS	INITIAL FORCE (KG)	TOTAL LENGTH	BODY DIA.	MODEL PAGE
EJECTORS	Rod sealed, colour coded Nitro Spring Ejectors.	MNE16	10 - 125	5.7	45 + (2 X stroke)	12	24
		MNE24	10 - 125	23	45 + (2 X stroke)	20	25
LIFTERS	Rod sealed, Nitro Spring Ejectors.	MSL0170	25 -125	17	62 + (2 X stroke)	38	26
		MSEL0170	25 -125	17	62 + (2 X stroke)	38	27
MINI NITRO	Rod sealed, colour coded mini Nitro Springs.	MS12	7 - 125	13	42 + (2 X stroke)	12	28
		MS15	7 - 125	18	42 + (2 X stroke)	15	29
		NG0	7 - 125	30	42 + (2 X stroke)	19	30
		NG1	10 - 200	50	42 + (2 X stroke)	25	31
		NG2	10 - 125	50	50 + (2 X stroke)	32	33
EX RANGE	Rod sealed, high force, most compact gas spring available.	EX0170	7 - 125	170	30 + (2 X stroke)	19	32
		EX0320	7 - 125	320	30 + (2 X stroke)	25	38
		EX0360	10 - 125	360	30 + (2 X stroke)	32	39
		EX0500	10 - 125	470	30 + (2 X stroke)	38	43
		EX0750	10 - 125	740	32 + (2 X stroke)	45	50
		EX1000	13 - 125	920	38 + (2 X stroke)	50	55
		EX1500	13 - 125	1500	44 + (2 X stroke)	63	61
		EX2400	16 - 125	2400	45 + (2 X stroke)	75	67
		EX4200	16 - 125	4200	58 + (2 X stroke)	95	74
		EX6600	16 - 125	6630	68 + (2 X stroke)	120	81
		EX9500	19 - 125	9500	78 + (2 X stroke)	150	88
G-EX RANGE	Extended version of the EX, with a G1/8 port and deeper tapped holes in the base.	G-EX0360	10 - 125	360	40 + (2 X stroke)	32	40
		G-EX0500	10 - 125	470	40 + (2 X stroke)	38	44
		G-EX0750	10 - 125	740	47 + (2 X stroke)	45	51
		G-EX1000	13 - 125	920	52 + (2 X stroke)	50	56
		G-EX1500	13 - 125	1500	52 + (2 X stroke)	63	62
		G-EX2400	16 - 125	2400	59 + (2 X stroke)	75	68
		G-EX4200	16 - 125	4200	62 + (2 X stroke)	95	75
		G-EX6600	16 - 125	6630	72 + (2 X stroke)	120	82
T-EX RANGE	Similar to the G-EX range but with differnt fixing positions	T-EX1000	13 - 125	920	52 + (2 X stroke)	50	57
		T-EX1500	13 - 125	1500	52 + (2 X stroke)	63	63
		T-EX2400	16 - 125	2400	59 + (2 X stroke)	75	69
		T-EX4200	16 - 125	4200	62 + (2 X stroke)	95	76
		T-EX6600	16 - 125	6630	72 + (2 X stroke)	120	83
		T-EX9500	19 - 125	9500	78 + (2 X stroke)	150	89
ISNG RANGE	Optimum design for gas spring durability conforming to ISO 11901 standard.	ISNG0250	10 - 125	265	50 + (2 X stroke)	38	35
		ISNG0500	10 - 160	470	85 + (2 X stroke)	45	45
		ISNG0750	13 - 300	740	95 + (2 X stroke)	50	52
		ISNG1500	25 - 300	1500	110 + (2 X stroke)	75	64
		ISNG3000	25 - 300	3000	120 + (2 X stroke)	95	73
		ISNG5000	25 - 300	5000	140 + (2 X stroke)	120	80
		ISNG7500	25 - 300	7500	155 + (2 X stroke)	150	86
		ISNG10000	25 - 300	10600	160 + (2 X stroke)	195	91
MX RANGE	MX combines the power of the EX range with standard size of the ISNG range.	MX1000	13 - 300	920	95 + (2 X stroke)	50	58
		MX2400	25 - 300	2400	110 + (2 X stroke)	75	70
		MX4200	25 - 300	4200	120 + (2 X stroke)	95	77
		MX6600	25 - 300	6630	140 + (2 X stroke)	120	84
		MX9500	25 - 300	9500	155 + (2 X stroke)	150	90
PLJ RANGE	Rod sealed gas spring with a lower force increase than the EX range.	PLJ0300	12.5 - 125	300	30 + (2 X stroke)	38	36
		PLJ0500	12.5 - 125	500	32 + (2 X stroke)	45	46
		PLJ0750	12.5 - 125	750	38 + (2 X stroke)	50	53
PL RANGE		PL0300	10 - 125	300	50.5 + (2 X stroke)	38	37
		PL0500	12.5 - 125	500	50.5 + (2 X stroke)	45	47
		PL0750	12.5 - 125	750	50.5 + (2 X stoke)	50	54
HDG RANGE	Ultra high force compact bore sealed gas spring.	HDG0042	6 - 50	425	56 - 195	25	41
		HDG007	6 - 50	740	63 - 195	32	48
		HDG010	6 - 50	1060	61 - 230	38	59
		HDG018	6 - 65	1800	66 - 271	50	65
		HDG029	10 - 65	2950	85 - 256	63	71
		HDG047	10 - 65	4700	80 - 273	75	78
		HDG075	10 - 65	7500	90 - 279	95	87
		HDG118	10 - 65	11800	100 - 320	120	92

Metrol Springs Ltd, established in 1984, design and manufacture nitrogen gas springs under the registered brand name "Nitro-Springs".

All Nitro-Springs are manufactured in the UK to the highest standards to meet the arduous demands of the metal stamping industry. Modern manufacturing facilities using the latest in production and design technology, ensure consistent, high quality, long life products that are competitively priced.

All our cylinders are designed and manufactured in accordance with our ISO9001:2015 quality system and conform to the rigorous standards of the European Pressure Equipment Directive (PED2014/68/EU).

Metrol Springs is a dynamic and progressive company, equipped to meet the needs of our customers. With a worldwide distribution network; spares, technical support and advice are never far away. We pride ourselves in a high level of service and support for our products wherever you are in the world.

In addition to our standard range of Nitro-Springs, we are able to design and manufacture non-standard sizes and bespoke products to meet the requirements for a wide range of applications in all types of industry. For information and assistance, please contact our technical department.

Nitro-Springs are covered by a comprehensive 2 year, 1,000,000 cycles guarantee.

nqa. ISO 9001 Registered

NITRO-SPRINGS
The engineers choice
METROL

PED 2014/68/EU

MANUFACTURERS OF NITRO-SPRINGS HEREBY

GUARANTEE FOR TWO YEARS OR 1,000,000 CYCLES

Metrol Springs Warrants its products to be free from manufacturing defects for a period of two years or working life of 1,000,000 cycles. The warranty is only valid if the product has been used within strict accordance with our user guidelines. The warranty shall not apply to any product that has been subjected to damage, alteration, abuse, misuse, misapplication or improper maintenance.

This warranty constitutes our entire and only warranty. There being no other warranties, expressed or implied in law or in fact including implied warranties of fitness and merchantability.

For more information on warranty issues, call the factory direct for all authorisations:
Metrol Springs Limited, 5 Clayfield Close, Moulton Park Industrial Estate, Northampton, NN3 6QF, UK
Tel: +44 (0) 1604 499332 Fax: +44 (0) 1604 493390 Email: sales@metrol.com

SAFETY FEATURES

If misused or damaged, gas springs can be a potential safety hazard. In order to minimise any hazard, Metrol gas springs have in-built active safety designs that safely degas the spring in case of overstroke or over-pressurisation.

DESIGN & MODELLING

Designs are evaluated using software modelling to determine safety factors and failure modes.

DYNAMIC TESTING

Metrol gas springs are tested to validate designs by;

- Fatigue testing over 2 million cycles at maximum pressure
- Burst test (over-pressurisation)
- Sealing components life tests
- Field trials

SAFETY & MAINTENANCE TRAINING

Metrol and authorised distributors offer essential safety training for the operation and maintenance of Metrol gas springs and gas spring systems.

CHARGING, OVERHAUL AND MAINTENANCE OF METROL GAS SPRINGS

Before attempting any work on a gas spring system the person must have attended and passed the Metrol training course. Upon completion of the course a certificate of competence is issued.

Attempting to perform work on a spring without completing the course may infringe safety and have a negative impact on the life of the product.

Overhaul and maintenance instructions are found in the manual. This manual is available to people who have completed the Metrol training course.

USE ONLY NITROGEN WHEN CHARGING - THE USE OF OXYGEN WILL CAUSE AN EXPLOSION.

TO BLEED CYLINDER

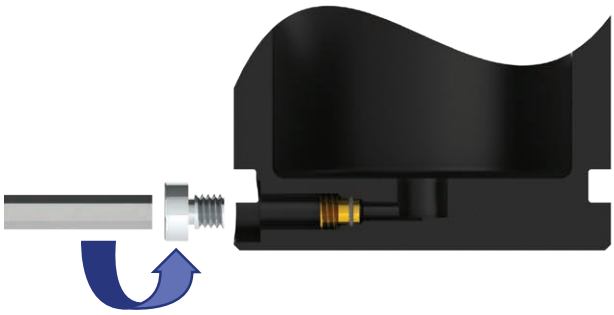

Withdraw the port plug.

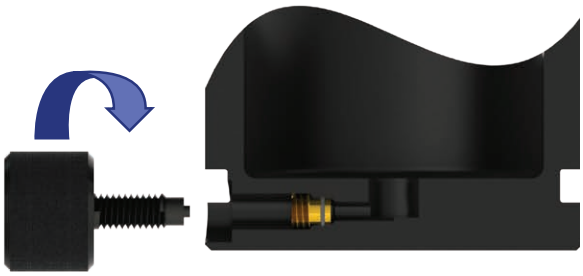

Discharge the gas spring with the vent key, pressing slightly on the valve. Always ensure gas springs are inverted when bleeding cylinder.

Only certified trained personnel should perform work on gas springs.

Wear safety goggles. Invert cylinder when bleeding cylinder.

When charging, ensure piston rod is fully extended.

Maximum charge pressure must not be exceeded.

GAS SPRING IDENTIFICATION

ALL METROL GAS SPRINGS are permanently marked on the cylinder.

- MODEL TYPE / STROKE (e.g. ISNG1500/050)
- MAX CHARGE PRESSURE
- WARNING - USE ONLY NITROGEN
- SERIAL NUMBER
- DATE OF MANUFACTURE
- CE / PED / 2014/68/EU (WHERE APPLICABLE ON CYLINDERS OVER 1L @150 BAR)
- QR CODE IDENTIFYING SPRING

TOOL SAFETY WARNING PLATES

MET: 8218 - MINI WARNING PLATE

MET: 8219 - LARGE WARNING PLATE

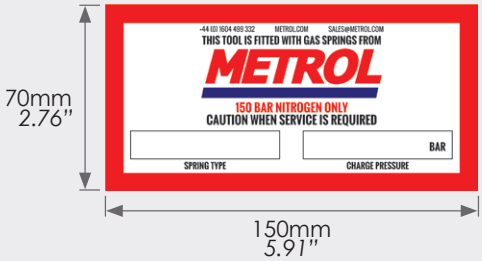

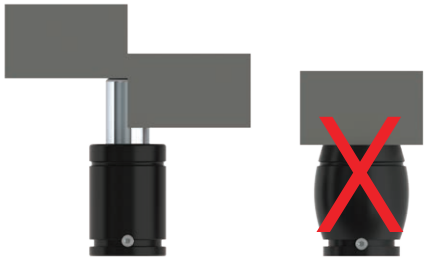

The nominal stroke listed in the catalogue may be utilised fully. However, it is strongly recommended that 5mm or 10% of the nominal stroke length is not used. This is to prevent 'overstroke' as a result of a change in the tool or a mishap.

USE ONLY NITROGEN

MAX. 176°F

MAX WORKING TEMPERATURE

PROTECT FROM DAMAGE

Any damage to the Gas Spring could affect safety and life of the product. The spring should be degassed and disposed of.

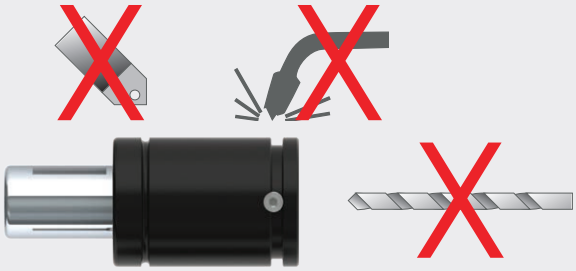

DO NOT MODIFY, MACHINE, DRILL OR WELD.

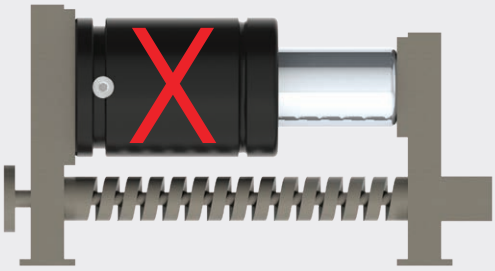

There is specific equipment to measure gas spring force. Please see page 127 for gas spring test stands.

ASSEMBLY GUIDE

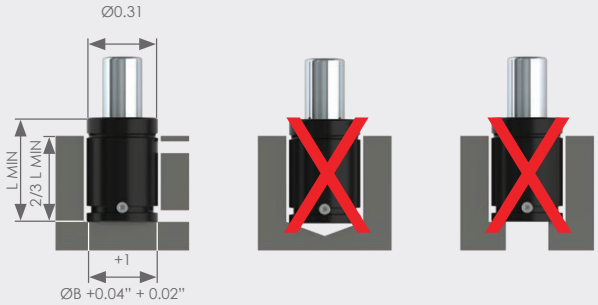

Ensure the gas spring sits on a flat surface. Uneven surfaces can cause side loading or structural damage.

Where possible, positively retain springs on a flat surface. Ensure bolts are tight and the spring cannot move.

Do not use the threaded hole in the piston, this is for maintenance only.

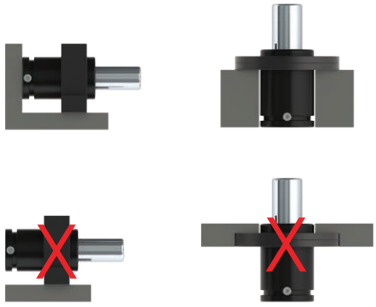

Always use a torque wrench to tighten.

Thread	Torque
M6	10Nm
M8	24Nm
M10	45Nm
M12	80Nm
M16	160-180Nm

Nitro-Springs have a range of fixing elements. Instructions must be adhered to. Incorrect fixing methods may reduce product life and can affect safety.

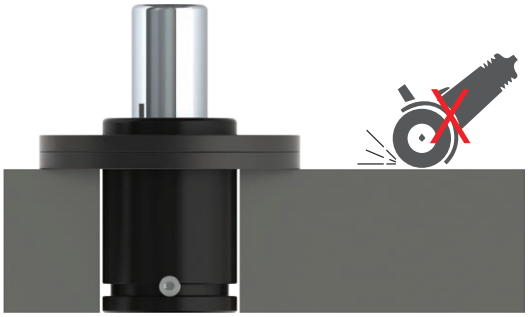

Gas springs should be protected from grinding dust during tool construction or maintenance.

Grinding dust can adhere to the piston surface and mix with oil to create a grinding paste which can damage the main seal.

If grinding has taken place near the springs, then the piston should be cleaned before operation.

Protect gas springs from liquid or solid contamination.

Pockets should be cleaned regularly and equipped with drainage.

Do not use gas springs in such a way that the piston rod is released freely from its compressed position. This could cause internal damage.

ROD GUIDANCE AND SIDE LOADING

Side loading gas springs is the most common cause for failure and should be avoided at all times. Metrol Gas Springs are robustly designed to minimise the impact of side loading with the following features.

FLEXI GUIDE DESIGN

Specially designed piston guides allow the piston to flex under side loads to eliminate metal to metal contact, which can damage the piston rod surface(large side forces still result in heat build up which can damage the seals).

ROD AND STOP GUIDED SPRINGS

The rod and stop guided springs utilise a two guide system. The main guide in the seal unit is designed to offer maximum guidance reducing the side load impact on the main seal.

The stop is also guided through the bore of the spring, with two areas of guidance the effects of side loading is reduced. This is considered to be the optimum design for durability and reducing the impact of side loading.

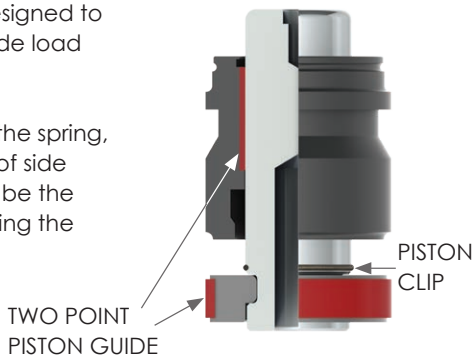

DESIGN GUIDE FOR REDUCING SIDE LOADING

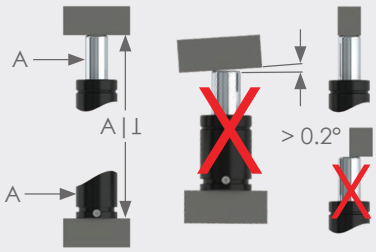

Gas Springs must always work completely perpendicular to the contact surface. Side forces will dramatically reduce the life of the product.

Thrust plates protect against damage to the piston top and the tool contact area. Damage can introduce side loading, reducing the life of the gas spring. (Please see page 95)

GAS SPRING OVERVIEW OF RANGES PAGES 12 TO 22

30 - 200KG PAGES 23 TO 33
66 - 441LBS

250 - 420KG PAGES 34 TO 41
551 - 926LBS

500 - 700KG PAGES 42 TO 48
1102 - 1543LBS

750 - 1000KG PAGES 49 TO 59
1653 - 2205LBS

1500 - 1800KG PAGES 60 TO 65
3307 - 3968LBS

2400 - 2900KG PAGES 66 TO 71
5291 - 6393LBS

3000 - 4700KG PAGES 72 TO 78
6614 - 10362LBS

5000 - 6600KG PAGES 79 TO 84
11023 - 14551LBS

7500 - 11800KG PAGES 85 TO 92
16534 - 26015LBS

GAS SPRING ACCESSORIES PAGES 93 TO 98

HOSE SYSTEMS PAGES 99 TO 128

GAS SPRING SERVICING ACCESSORIES PAGES 129 TO 133

EJECTOR SPRINGS OVERVIEW

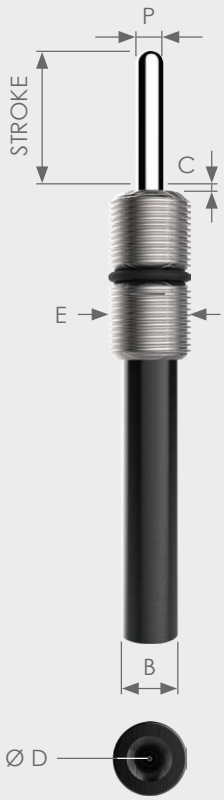

The MNE range of Ejector springs are designed to be mounted in a threaded pocket, (built into the application), enabling the part to be 'ejected' from the mould after the compression cycle is complete.

The MNE16 version is available with either a 1.5mm or 2mm pitch for compatibility. The MNE24 is available with just the 1.5mm pitch.

This range of Ejectors are available with either a 12mm or 20mm diameter body.

SPRING TYPE	PCD	Ø D	TAPPED HOLE DEPTH	E
MNE16	-	M6 X 1	5mm	M16 X 1.5 / M16 X 2
MNE24	-	M6 X 1	5mm	M24 X 1.5

USE ONLY NITROGEN

MAX. PRESSURE:	MIN. PRESSURE:	MAX. PISTON VELOCITY:
150 BAR *2176 PSI*	**12 BAR** *174 PSI*	**1.6M/SEC** *5.25ft/SEC*

PED 2014/68/EU

MODEL	P	B	INITIAL FORCE (daN/lbf)	STROKE RANGE	C	MOUNTING OPTIONS	PIPE SYSTEM			OVERHAUL
							S24	MICRO	CNOMO	
MNE16	6 *0.24*	12 *0.47*	5.7 - 42 *13 - 94*	10 - 125 *0.39 - 4.92*	1 *0.04*	TP	×	×	×	×
MNE24	12 *0.47*	20 *0.79*	23 - 170 *52 - 382*	10 - 125 *0.39 - 4.92*	1 *0.04*	TP	×	×	×	×

EJECTOR SPRING FITTING TOOL

To install the MNE range of ejectors, please use the special Metrol fitting tool.

Please specify MET 9006 when ordering.

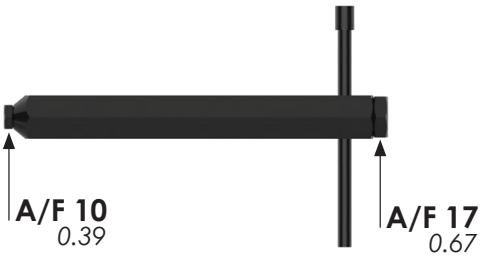

The MS range of Mini Nitro-Springs are able to be mounted in drop-in pockets and with a front flange. Not only can they be used to 'eject' a part but also form part of the Mini Nitro springs range due to the extra mounting option and lack of external thread.

This range of Mini Nitro-Springs are available with either a 12mm or 15mm diameter body.

SPRING TYPE	PCD	Ø D	TAPPED HOLE DEPTH
MS12	-	M6 X 1	5mm
MS15	-	M6 X 1	5mm

USE ONLY NITROGEN

MAX. PRESSURE:	MIN. PRESSURE:	MAX. PISTON VELOCITY:
180 BAR *2611 PSI*	**20 BAR** *290 PSI*	**1.6M/SEC** *5.25ft/SEC*

PED 2014/68/EU

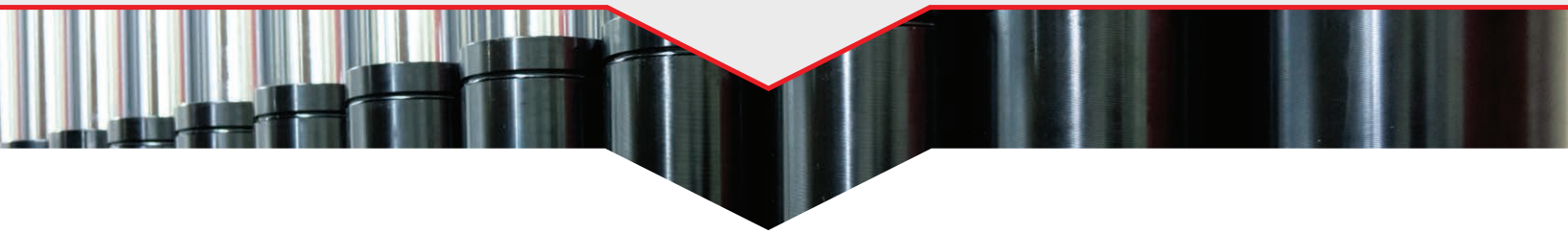

	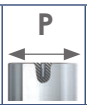	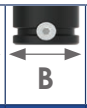		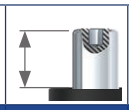						
MODEL	**P**	**B**	**INITIAL FORCE (daN/*lbf*)**	**STROKE RANGE**	**C**	**MOUNTING OPTIONS**	**PIPE SYSTEM**			**OVERHAUL**
							S24	**MICRO**	**CNOMO**	
MS12	**6** *0.24*	**12** *0.47*	**13 - 50** *29 - 112*	**7 - 125** *0.28 - 4.92*	**1** *0.04*	**DP, TH, FF**	×	×	×	×
MS15	**7** *0.28*	**15** *0.59*	**18 - 70** *40 - 157*	**7 - 125** *0.28 - 4.92*	**1** *0.04*	**DP, TH, FF**	×	×	×	×

MINI NITRO SPRINGS OVERVIEW

Originally designed to replace die springs, the Mini Nitro-Springs are a versatile range. These are available in 19, 25 and 32mm diameters. Mini Nitro-Springs can be pre-set to four different pressures, represented by the colours, green, blue, red and yellow.

An upper and lower C groove can be used for attachment with a front flange.

SPRING TYPE	PCD	Ø D	TAPPED HOLE DEPTH
NG0	-	M6 X 1	5mm
NG1	-	M6 X 1	5mm
NG2	-	M6 X 1	10mm

USE ONLY NITROGEN

MAX. PRESSURE:	MIN. PRESSURE:	MAX. PISTON VELOCITY:
180 BAR *2611 PSI*	**20 BAR** *290 PSI*	**1.6M/SEC** *5.25ft/SEC*

ISO PED 2014/68/EU

MODEL	P	B	INITIAL FORCE (daN/*lbf*)	STROKE RANGE	C	MOUNTING OPTIONS	PIPE SYSTEM			OVERHAUL
							S24	MICRO	CNOMO	
NG0	8 *0.31*	19 *0.75*	30 - 90 *67 - 202*	7 - 125 *0.28 - 4.92*	1 *0.04*	DP, TH, FF	×	×	×	×
NG1	12 *0.47*	24.9 *0.98*	50 - 200 *112 - 450*	10 - 200 *0.39 - 7.87*	1 *0.04*	DP, TH, FF, ES	×	×	×	×
NG2	12 *0.47*	32 *1.26*	50 - 200 *112 - 450*	10 - 125 *0.39 - 4.92*	1 *0.04*	DP, TH, FF, SFF, SF	×	×	×	×

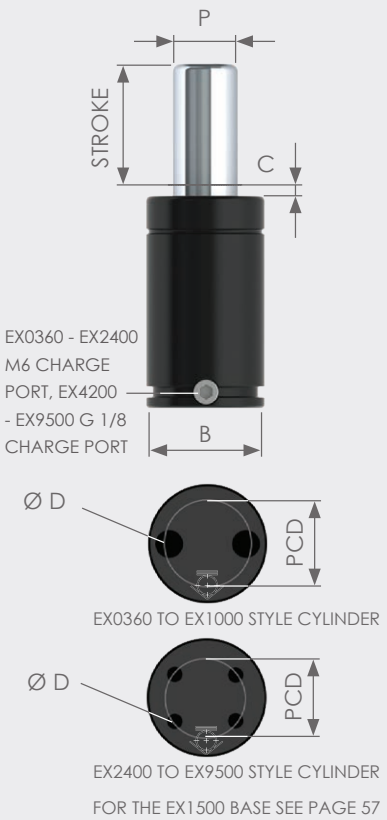

FOR THE EX1500 BASE SEE PAGE 57

The EX range is our most powerful, compact rod sealed gas spring. Special rod guiding elements in the seal unit reduce side load impact to prevent rod and seal wear, increasing durability and seal life.

EX0170 and EX0320 have upper and lower C grooves for front flange mounting.

EX0360 > EX9500 the upper C groove and lower U groove allow numerous flange mounting options.

EX0360 > EX2400 there is an M6 side port for charging and also connecting in series using the Micro hose system or CNOMO hose system.

EX4200 > EX9500 there is a G1/8 side port for charging and connecting in series using the CNOMO, Micro and S24 hose systems.

SPRING TYPE	PCD	Ø D	TAPPED HOLE DEPTH
EX0170	-	**M6 X 1**	**5mm** / *0.20"*
EX0320	-	**M6 X 1**	**5mm** / *0.20"*
EX0360	**20**/*0.79*	**M6 X 2**	**9mm** / *0.35"*
EX0500	**20**/*0.79* **25**/*0.98*	**M6 X 2**	**9mm** / *0.35"*
EX0750	**20**/*0.79*	**M8 X 2**	**9mm** / *0.35"*
EX1000	**20**/*0.79*	**M8 X 2**	**9mm** / *0.35"*
EX1500	**20**/*0.79* **40**/*1.57*	**M8 X 6**	**9mm** / *0.35"*
EX2400	**40**/*1.57*	**M8 X 4**	**6mm** / *0.24"*
EX4200	**60**/*2.36*	**M8 X 4**	**12mm** / *0.47"*
EX6600	**80**/*3.15*	**M10 X 4**	**15mm** / *0.59"*
EX9500	**100**/*3.94*	**M10 X 4**	**15mm** / *0.59"*

USE ONLY NITROGEN

MAX. PRESSURE: **150 BAR** *2176 PSI*

MIN. PRESSURE: **20 BAR** *290 PSI*

MAX. PISTON VELOCITY: **1.6M/SEC** *5.25ft/SEC*

SERVICE KIT AVAILABLE

ISO

PED 2014/68/EU

MODEL	P	B	INITIAL FORCE (daN/lbf)	STROKE RANGE	C	MOUNTING OPTIONS	PIPE SYSTEM S24	PIPE SYSTEM MICRO	PIPE SYSTEM CNOMO	OVERHAUL
EX0170	**11** *0.43*	**19** *0.75*	**170** *382*	**7 - 125** *0.28 - 4.92*	**1** *0.04*	**DP, TH, FF**	×	×	×	×
EX0320	**15** *0.59*	**24.9** *0.98*	**320** *719*	**7 - 125** *0.28 - 4.92*	**1** *0.04*	**DP, TH, FF, ES**	×	×	×	×
EX0360	**16** *0.63*	**32** *1.26*	**360** *809*	**10 - 125** *0.39 - 4.92*	**2** *0.08*	**TH, FF, SF**	×	✓	✓	✓
EX0500	**20** *0.79*	**38** *1.10*	**470** *1057*	**10 - 125** *0.39 - 4.92*	**2** *0.08*	**TH, FF, SF, SFF, ES**	×	✓	✓	✓
EX0750	**25** *0.98*	**45** *1.77*	**740** *1664*	**10 - 125** *0.39 - 4.92*	**2** *0.08*	**TH, FF, SF, SFF, ES, BP**	×	✓	✓	✓
EX1000	**28** *1.10*	**50** *1.97*	**920** *2068*	**13 - 125** *0.51 - 4.92*	**3** *0.12*	**TH, FF, SF, SFF, ES, BP**	×	✓	✓	✓
EX1500	**36** *1.42*	**63** *2.48*	**1500** *3372*	**13 - 125** *0.51 - 4.92*	**3** *0.12*	**TH, FF, SF, SFF, BP**	×	✓	✓	✓
EX2400	**45** *1.77*	**75** *2.95*	**2400** *5395*	**16 - 125** *0.63 - 4.92*	**3** *0.12*	**TH, FF, SF, SFF, ES, BP**	×	✓	✓	✓
EX4200	**60** *2.36*	**95** *3.74*	**4200** *9442*	**16 - 125** *0.63 - 4.92*	**3** *0.12*	**TH, FF, SF, SFF, ES, BP**	✓	✓	✓	✓
EX6600	**75** *2.95*	**120** *4.72*	**6630** *14905*	**16 - 125** *0.63 - 4.92*	**3** *0.12*	**TH, FF, SF, SFF, ES, BP**	✓	✓	✓	✓
EX9500	**90** *3.54*	**150** *5.91*	**9500** *21357*	**19 - 125** *0.75 - 4.92*	**3** *0.12*	**TH, FF, SF, SFF, ES, BP**	✓	✓	✓	✓

G-EX RANGE OVERVIEW

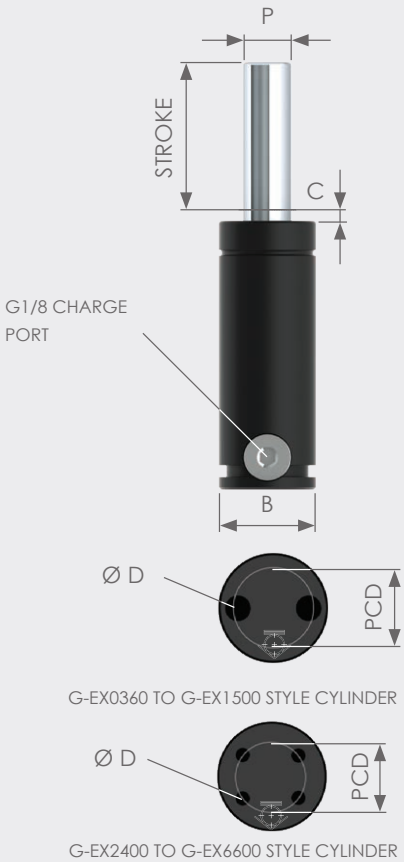

The G-EX range is based upon the high tonnage compact EX range, but with a longer body incorporating deeper tapped holes in the base for fixing.

G-EX0360 > G-EX4200 the upper C groove and lower U groove allow numerous flange mounting options.

The full range of G-EX springs have G1/8 ports for direct connection to the CNOMO, Micro and S24 Hose systems.

SPRING TYPE	PCD	Ø D	TAPPED HOLE DEPTH
G-EX0360	**20**/*0.79*	**M6 X 2**	**16mm** / *0.63"*
G-EX0500	**25**/*0.98*	**M6 X 2**	**15mm** / *0.59"*
G-EX0750	**20**/*0.79*	**M8 X 2**	**16mm** / *0.63"*
G-EX1000	**20**/*0.79*	**M8 X 2**	**16mm** / *0.63"*
G-EX1500	**20**/*0.79*	**M8 X 2**	**16mm** / *0.63"*
G-EX2400	**40**/*1.57*	**M8 X 4**	**16mm** / *0.63"*
G-EX4200	**60**/*2.36*	**M8 X 4**	**16mm** / *0.63"*
G-EX6600	**80**/*3.15*	**M10 X 4**	**16mm** / *0.63"*

USE ONLY NITROGEN

MAX. PRESSURE:	MIN. PRESSURE:	MAX. PISTON VELOCITY:
150 BAR *2176 PSI*	**20 BAR** *290 PSI*	**1.6M/SEC** *5.25ft/SEC*

SERVICE KIT AVAILABLE

PED 2014/68/EU

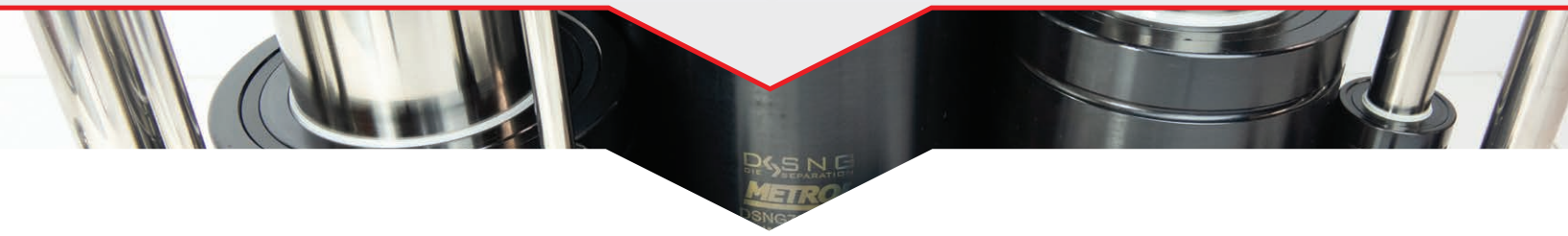

MODEL	P	B	INITIAL FORCE (daN/lbf)	STROKE RANGE	C	MOUNTING OPTIONS	PIPE SYSTEM			OVERHAUL
							S24	MICRO	CNOMO	
G-EX0360	**16** *0.63*	**32** *1.26*	**360** *809*	**10 - 125** *0.39 - 4.92*	**2** *0.08*	**TH, FF, SF**	✓	✓	✓	✓
G-EX0500	**20** *0.79*	**38** *1.50*	**470** *1057*	**10 - 125** *0.39 - 4.92*	**2** *0.08*	**TH, FF, SF, SFF, ES**	✓	✓	✓	✓
G-EX0750	**25** *0.98*	**45** *1.77*	**740** *1664*	**10 - 125** *0.39 - 4.92*	**2** *0.08*	**TH, FF, SF, SFF, ES, BP**	✓	✓	✓	✓
G-EX1000	**28** *1.10*	**50** *1.97*	**920** *2068*	**13 - 125** *0.51 - 4.92*	**3** *0.12*	**TH, FF, SF, SFF, ES, BP**	✓	✓	✓	✓
G-EX1500	**36** *1.42*	**63** *2.48*	**1500** *3372*	**13 - 125** *0.51 - 4.92*	**3** *0.12*	**TH, FF, SF, SFF, BP**	✓	✓	✓	✓
G-EX2400	**45** *1.77*	**75** *2.95*	**2400** *5395*	**16 - 125** *0.63 - 4.92*	**3** *0.12*	**TH, FF, SF, SFF, ES, BP**	✓	✓	✓	✓
G-EX4200	**60** *2.36*	**95** *3.74*	**4200** *9442*	**16 - 125** *0.63 - 4.92*	**3** *0.12*	**TH, FF, SF, SFF, ES, BP**	✓	✓	✓	✓
G-EX6600	**75** *2.95*	**120** *4.72*	**6630** *14905*	**16 - 125** *0.63 - 4.92*	**3** *0.12*	**TH, FF, SF, SFF, ES, BP**	✓	✓	✓	✓

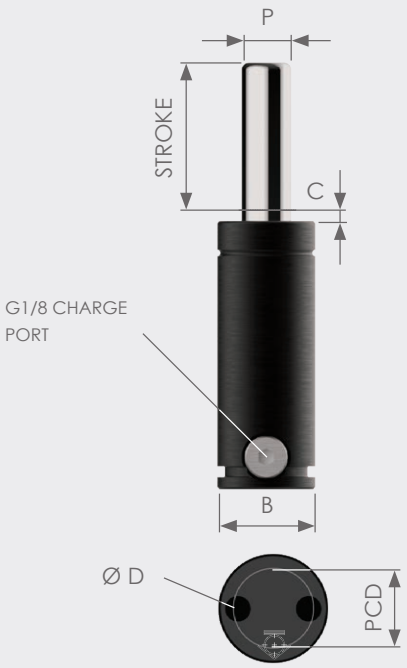

T-EX1000 TO T-EX1500 STYLE CYLINDER

T-EX2400 TO T-EX9500 STYLE CYLINDER

The T-EX range is based upon the high tonnage compact EX range, but with a longer body incorporating deeper tapped holes in the base for fixing.

T-EX1000 ≥ T-EX9500 the upper C groove and lower C groove allow numerous flange mounting options.

The full range of T-EX springs have G1/8 ports for direct connection to the CNOMO, Micro and S24 Hose systems.

SPRING TYPE	PCD	Ø D	TAPPED HOLE DEPTH
T-EX1000	**31.7**/*1.25*	M10 X 2	**16mm** / *0.63"*
T-EX1500	**20**/*0.79*	M8 X 2	**16mm** / *0.63"*
T-EX2400	**53.9**/*2.12*	M12 X 4	**16mm** / *0.63"*
T-EX4200	**76.2**/*3.00*	M12 X 4	**16mm** / *0.63"*
T-EX6600	**80.8**/*3.18*	M12 X 4	**16mm** / *0.63"*
T-EX9500	**100**/*3.94*	M12 X 4	**16mm** / *0.63"*

USE ONLY NITROGEN

MAX. PRESSURE:	MIN. PRESSURE:	MAX. PISTON VELOCITY:
150 BAR *2176 PSI*	**20 BAR** *290 PSI*	**1.6M/SEC** *5.25ft/SEC*

SERVICE KIT AVAILABLE

PED 2014/68/EU

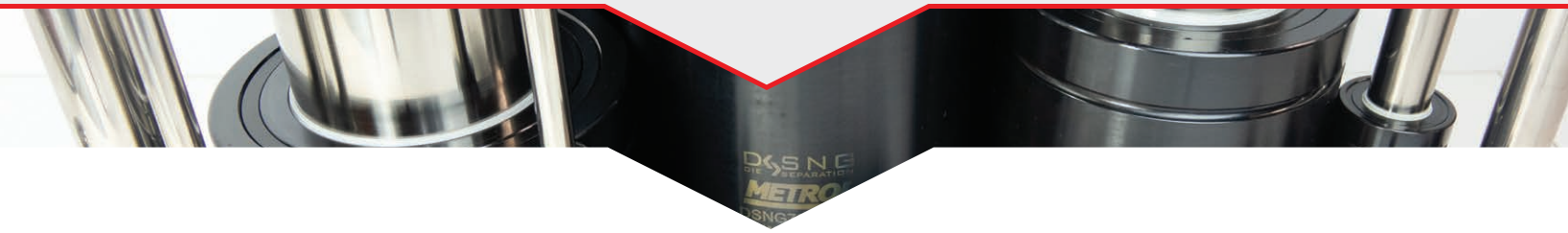

MODEL	P	B	INITIAL FORCE (daN/lbf)	STROKE RANGE	C	MOUNTING OPTIONS	PIPE SYSTEM			OVERHAUL
							S24	MICRO	CNOMO	
T-EX1000	**28** *1.10*	**50** *1.97*	**920** *2068*	**13 - 125** *0.51 - 4.92*	**3** *0.12*	TH, FF, LSF, SFF, ES, BP	✓	✓	✓	✓
T-EX1500	**36** *1.42*	**63** *2.48*	**1500** *3372*	**13 - 125** *0.51 - 4.92*	**3** *0.12*	TH, FF, LSF, SFF, BP	✓	✓	✓	✓
T-EX2400	**45** *1.77*	**75** *2.95*	**2400** *5395*	**16 - 125** *0.63 - 4.92*	**3** *0.12*	TH, FF, LSF, SFF, ES, BP	✓	✓	✓	✓
T-EX4200	**60** *2.36*	**95** *3.74*	**4200** *9442*	**16 - 125** *0.63 - 4.92*	**3** *0.12*	TH, FF, LSF, SFF, ES, BP	✓	✓	✓	✓
T-EX6600	**75** *2.95*	**120** *4.72*	**6630** *14905*	**16 - 125** *0.63 - 4.92*	**3** *0.12*	TH, FF, LSF, SFF, ES, BP	✓	✓	✓	✓
T-EX9500	**90** *3.54*	**150** *5.91*	**9500** *21357*	**19 - 125** *0.75 - 4.92*	**3** *0.12*	TH, FF, LSF, SFF, ES, BP	✓	✓	✓	✓

ISNG RANGE OVERVIEW

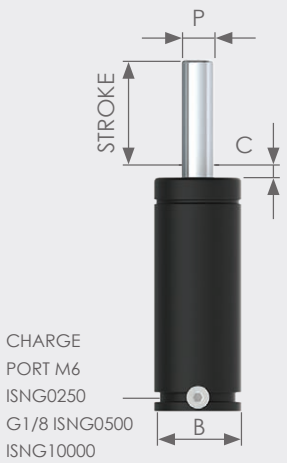

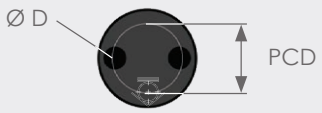

ISNG0250 TO ISNG0750 CYLINDER

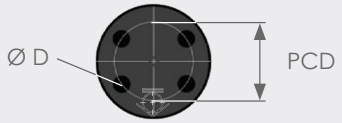

ISNG1500 TO ISNG10000 CYLINDER

The ISNG range is the optimum design for gas spring durability and conforms to the ISO11901 gas spring standard. ISNG range includes strokes up to 300mm and incorporates longer seal unit guides and bore guided piston stops for maximum durability.

Upper C-Groove and Lower U-Groove give numerous flange mounting options.

The ISNG0250 springs have M6 charge ports for direct connection to CNOMO and Micro hose systems only.

Every other spring in this range supports direct connection to all three hose systems; CNOMO, Micro and S24.

SPRING TYPE	PCD	Ø D	TAPPED HOLE DEPTH
ISNG0250	**18**/*0.71* **25**/*0.98*	**M6 X 2**	**12mm** / *0.47"*
ISNG0500	**20**/*0.79*	**M8 X 2**	**17mm** / *0.67"*
ISNG0750	**20**/*0.79*	**M8 X 2**	**17mm** / *0.67"*
ISNG1500	**40**/*1.57*	**M8 X 4**	**12mm** / *0.47"*
ISNG3000	**60**/*2.36*	**M8 X 4**	**13mm** / *0.51"*
ISNG5000	**80**/*3.15*	**M10 X 4**	**10mm** / *0.39"*
ISNG7500	**100**/*3.94*	**M10 X 4**	**10mm** / *0.39"*
ISNG10000	**120**/*4.72*	**M12 X 4**	**16mm** / *0.63"*

USE ONLY NITROGEN

MAX. PRESSURE: **150 BAR** *2176 PSI*

MIN. PRESSURE: **20 BAR** *290 PSI*

MAX. PISTON VELOCITY: **1.6M/SEC** *5.25ft/SEC*

SERVICE KIT AVAILABLE

ISO PED 2014/68/EU

MODEL	P	B	INITIAL FORCE (daN/*lbf*)	STROKE RANGE	C	MOUNTING OPTIONS	PIPE SYSTEM			OVERHAUL
							S24	MICRO	CNOMO	
ISNG0250	**14** *0.55*	**38** *1.50*	**265** *596*	**10 - 125** *0.39 - 4.92*	**2** *0.08*	**TH, FF, SF, SFF, ES**	×	✓	✓	✓
ISNG0500	**20** *0.79*	**45** *1.77*	**470** *1057*	**10 - 160** *0.39 - 6.30*	**2** *0.08*	**TH, FF, SF, SFF, ES, BP**	✓	✓	✓	✓
ISNG0750	**25** *0.98*	**50** *1.97*	**740** *1664*	**12.7 - 300** *0.50 - 11.81*	**3** *0.12*	**TH, FF, SF, SFF, ES, BP**	✓	✓	✓	✓
ISNG1500	**36** *1.42*	**75** *2.95*	**1500** *3372*	**25 - 300** *0.98 - 11.81*	**3** *0.12*	**TH, FF, SF, SFF, ES, BP**	✓	✓	✓	✓
ISNG3000	**50** *1.97*	**95** *3.74*	**3000** *6744*	**25 - 300** *0.98 - 11.81*	**3** *0.12*	**TH, FF, SF, SFF, ES, BP**	✓	✓	✓	✓
ISNG5000	**65** *2.56*	**120** *4.72*	**5000** *11240*	**25 - 300** *0.98 - 11.81*	**3** *0.12*	**TH, FF, SF, SFF, ES, BP**	✓	✓	✓	✓
ISNG7500	**80** *3.15*	**150** *5.91*	**7500** *16861*	**25 - 300** *0.98 - 11.81*	**3** *0.12*	**TH, FF, SF, SFF, ES, BP**	✓	✓	✓	✓
ISNG10000	**95** *3.74*	**195** *7.68*	**10600** *23830*	**25 - 300** *0.98 - 11.81*	**3** *0.12*	**TH, FF, SF, SFF, BP**	✓	✓	✓	✓

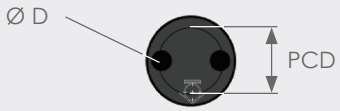

MX1000 STYLE CYLINDER

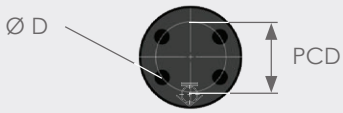

MX2400 TO MX9500 STYLE CYLINDER

The MX range combines the force of the EX range in the envelope sizes of the full height ISNG range, providing a high force durable gas spring.

MX range includes strokes up to 300mm and incorporates longer seal unit guides and bore guided piston stops for maximum durability.

The MX range can be connected in series using the CNOMO, Micro and S24 hose systems.

Upper C-Groove and Lower U-Groove give numerous flange mounting options.

SPRING TYPE	PCD	Ø D	TAPPED HOLE DEPTH
MX1000	**20**/*0.79*	**M8 X 2**	**15mm** / *0.59"*
MX2400	**40**/*1.57*	**M8 X 4**	**16mm** / *0.63"*
MX4200	**60**/*2.36*	**M8 X 4**	**15mm** / *0.59"*
MX6600	**80**/*3.15*	**M10 X 4**	**15mm** / *0.59"*
MX9500	**100**/*3.94*	**M10 X 4**	**15mm** / *0.59"*

USE ONLY NITROGEN

MAX. PRESSURE:	MIN. PRESSURE:	MAX. PISTON VELOCITY:
150 BAR *2176 PSI*	**20 BAR** *290 PSI*	**1.6M/SEC** *5.25ft/SEC*

SERVICE KIT AVAILABLE

ISO

PED 2014/68/EU

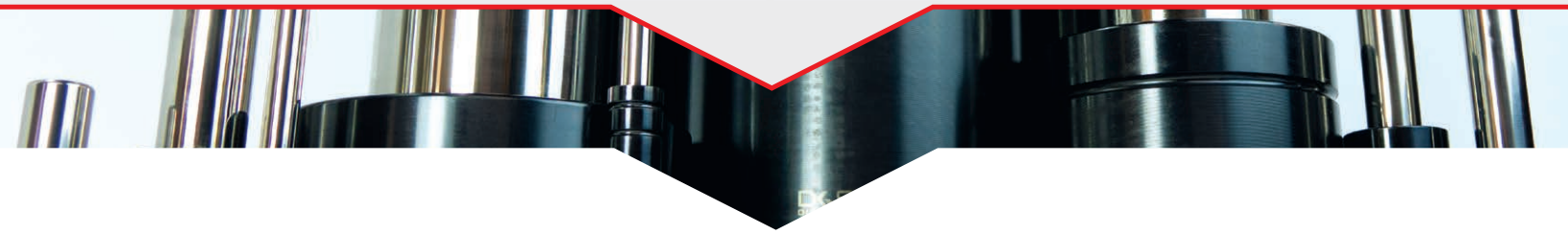

	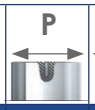	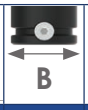		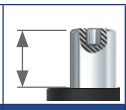	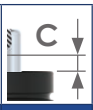			

MODEL	P	B	INITIAL FORCE (daN/*lbf*)	STROKE RANGE	C	MOUNTING OPTIONS	PIPE SYSTEM			OVERHAUL
							S24	MICRO	CNOMO	
MX1000	**28** *1.10*	**50** *1.97*	**920** *2068*	**13 - 300** *0.51 - 11.81*	**3** *0.12*	**TH, FF, SF, SFF, ES, BP**	✓	✓	✓	✓
MX2400	**45** *1.77*	**75** *2.95*	**2400** *5395*	**25 - 300** *0.98 - 11.81*	**3** *0.12*	**TH, FF, SF, SFF, ES, BP**	✓	✓	✓	✓
MX4200	**60** *2.36*	**95** *3.74*	**4200** *9442*	**25 - 300** *0.98 - 11.81*	**3** *0.12*	**TH, FF, SF, SFF, ES, BP**	✓	✓	✓	✓
MX6600	**75** *2.95*	**120** *4.72*	**6630** *14905*	**25 - 300** *0.98 - 11.81*	**3** *0.12*	**TH, FF, SF, SFF, ES, BP**	✓	✓	✓	✓
MX9500	**90** *3.54*	**150** *5.91*	**9500** *21357*	**25 - 300** *0.98 - 11.81*	**3** *0.12*	**TH, FF, SF, SFF, ES, BP**	✓	✓	✓	✓

PLJ RANGE OVERVIEW

The PLJ series offers a customer heights comparable to EX but with lower internal pressure rises leading to longer cylinder life.

SPRING TYPE	PCD	Ø D	TAPPED HOLE DEPTH
PLJ0300	**20**/*0.79* **25**/*0.98*	**M6 X 4**	**6mm** / *0.24"*
PLJ0500	**20**/*0.79*	**M8 X 2**	**6mm** / *0.24"*
PLJ0750	**20**/*0.79*	**M8 X 2**	**6mm** / *0.24"*

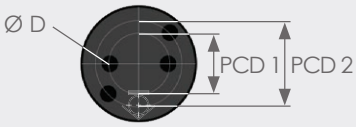

PLJ0300 STYLE CYLINDER

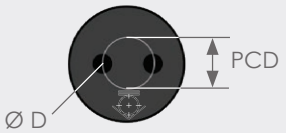

PLJ0500 TO PLJ0750 STYLE CYLINDER

USE ONLY NITROGEN

MAX. PRESSURE:	MIN. PRESSURE:	MAX. PISTON VELOCITY:
150 BAR *2176 PSI*	**20 BAR** *290 PSI*	**1.6M/SEC** *5.25ft/SEC*

ISO PED 2014/68/EU

	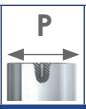	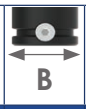		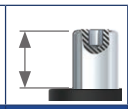						
	P	B			C					
MODEL	**P**	**B**	**INITIAL FORCE (daN/*lbf*)**	**STROKE RANGE**	**C**	**MOUNTING OPTIONS**	**PIPE SYSTEM**			**OVERHAUL**
							S24	**MICRO**	**CNOMO**	
PLJ0300	**16** *0.63*	**38** *1.50*	**20 - 150** *45 - 337*	**12.5 - 125** *0.49 - 4.92*	**2** *0.08*	**TH, FF, SF, SFF, ES**	✓	✓	✓	✓
PLJ0500	**20** *0.79*	**45** *1.77*	**20 - 150** *45 - 337*	**12.5 - 125** *0.49 - 4.92*	**2** *0.08*	**TH, FF, SF, SFF, ES**	✓	✓	✓	✓
PLJ0750	**25** *0.98*	**50** *1.97*	**20 - 150** *45 - 337*	**12.5 - 125** *0.49 - 4.92*	**2** *0.08*	**TH, FF, SF, SFF, ES**	✓	✓	✓	✓

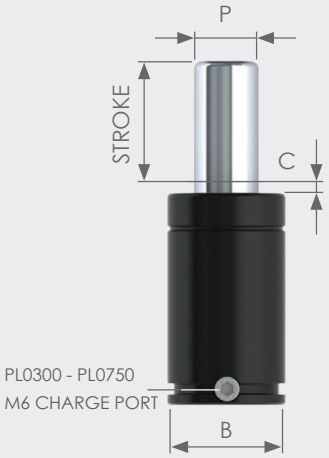

The PL series allows the customer to have a reduced height over an ISNG but still offers significant bearing surface to minimize the impact of side loading.

SPRING TYPE	PCD	Ø D	TAPPED HOLE DEPTH
PL0300	**20**/*0.79* **25**/*0.98*	**M6 X 4**	**6mm** / *0.24"*
PL0500	**20**/*0.79*	**M8 X 2**	**6mm** / *0.24"*
PL0750	**20**/*0.79*	**M8 X 2**	**6mm** / *0.24"*

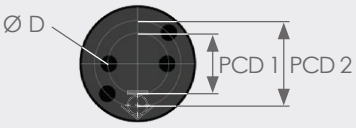

PL0300 STYLE CYLINDER

PL0500 TO PL0750 STYLE CYLINDER

USE ONLY NITROGEN

MAX. PRESSURE:	MIN. PRESSURE:	MAX. PISTON VELOCITY:
150 BAR *2176 PSI*	**20 BAR** *290 PSI*	**1.6M/SEC** *5.25ft/SEC*

ISO PED 2014/68/EU

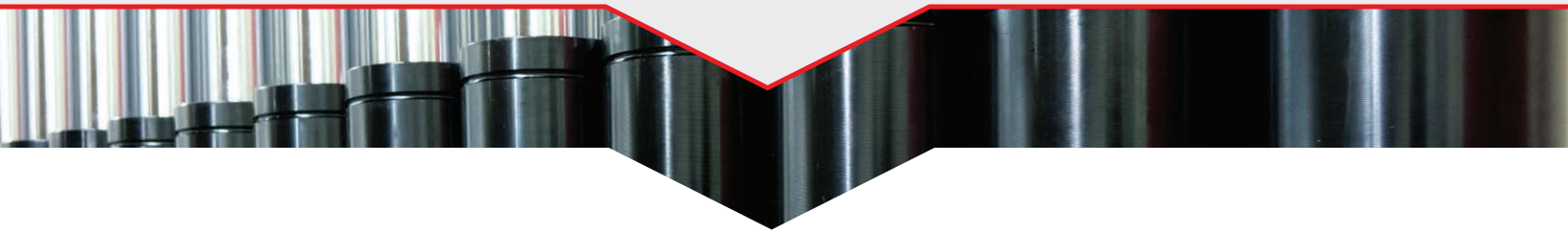

MODEL	P	B	INITIAL FORCE (daN/*lbf*)	STROKE RANGE	C	MOUNTING OPTIONS	PIPE SYSTEM			OVERHAUL
							S24	MICRO	CNOMO	
PL0300	**16** *0.63*	**38** *1.50*	**20 - 150** *45 - 337*	**10 - 125** *0.39 - 4.92*	**2** *0.08*	**TH, FF, SF, SFF, ES**	✓	✓	✓	✓
PL0500	**20** *0.79*	**45** *1.77*	**20 - 150** *45 - 337*	**12.5 - 125** *0.49 - 4.92*	**2** *0.08*	**TH, FF, SF, SFF, ES**	✓	✓	✓	✓
PL0750	**25** *0.98*	**50** *1.97*	**20 - 150** *45 - 337*	**12.5 - 125** *0.49 - 4.92*	**2** *0.08*	**TH, FF, SF, SFF, ES**	✓	✓	✓	✓

HDG RANGE OVERVIEW

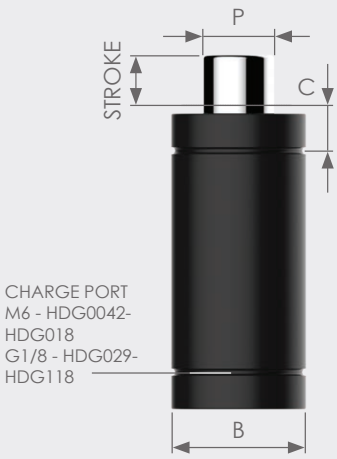

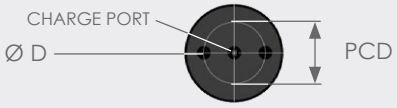

HDG007 TO HDG-029 STYLE CYLINDER

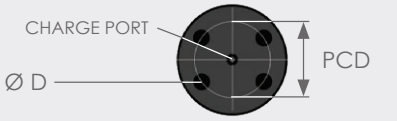

HDG047 TO HDG118 STYLE CYLINDER

The HDG range is a compact bore sealed gas spring, giving maximum force for the cylinder diameter.

Stroke lengths up to 65mm are available.

Upper and lower C-Grooves allow the springs to be clamped using flanges, in addition to the tapped holes in the base.

HDG010 > HDG118 there is a Side Port Base Plate attachement available with a G1/8 side port for charging and connecting in series using the CNOMO, Micro and S24 hose systems.

It is always recommended that the springs be positively retained.

SPRING TYPE	PCD	Ø D	TAPPED HOLE DEPTH	SIDE PORT BASES
HDG0042	-	M6 X 1	16mm / *0.63"*	-
HDG007	15/*0.59*	M6 X 2	9mm / *0.35"*	-
HDG010	17/*0.67*	M6 X 2	6mm / *0.24"*	HDG-010-SP
HDG018	26/*1.02*	M6 X 2	9mm / *0.35"*	HDG-018-SP
HDG029	34/*1.34*	M8 X 2	10mm / *0.39"*	HDG-029-SP
HDG047	40/*1.57*	M8 X 4	8mm / *0.31"*	HDG-047-SP
HDG075	52/*2.05*	M8 X 4	13.5mm / *0.53"*	HDG-075-SP
HDG118	68/*2.68*	M8 X 4	11mm / *0.43"*	HDG-118-SP

USE ONLY NITROGEN

MAX. PRESSURE:	MIN. PRESSURE:	MAX. PISTON VELOCITY:
150 BAR *2176 PSI*	**25 BAR** *363 PSI*	**0.8M/SEC** *2.62ft/SEC*

SERVICE KIT AVAILABLE

PED 2014/68/EU

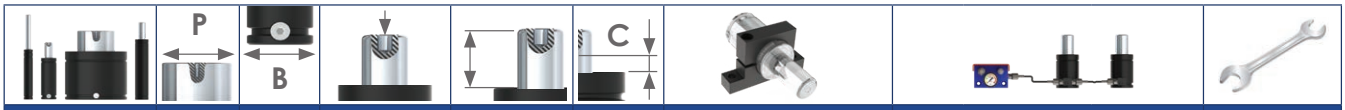

MODEL	P	B	INITIAL FORCE (daN/*lbf*)	STROKE RANGE	C	MOUNTING OPTIONS	PIPE SYSTEM S24	PIPE SYSTEM MICRO	PIPE SYSTEM CNOMO	OVERHAUL
HDG0042	12 *0.47*	24.9 *0.98*	425 *955*	6 - 50 *0.24 - 1.97*	1 *0.04*	DP, TH, FF	×	×	×	✓
HDG007	20 *0.79*	32 *1.26*	740 *1664*	6 - 50 *0.24 - 1.97*	3 *0.12*	TH, FF, SFF	×	×	×	✓
HDG010	20 *0.79*	38 *1.50*	1060 *2383*	6 - 50 *0.24 - 1.97*	3 *0.12*	TH, FF, SFF, SF	✓	✓	✓	✓
HDG018	30 *1.18*	50 *1.97*	1800 *4047*	6 - 65 *0.24 - 2.56*	3 *0.12*	TH, FF, SFF, SF	✓	✓	✓	✓
HDG029	45 *1.77*	63.2 *2.49*	2950 *6332*	6 - 65 *0.24 - 2.56*	3 *0.12*	TH, FF, SFF, SF	✓	✓	✓	✓
HDG047	50 *1.97*	75 *2.95*	4700 *10566*	10 - 65 *0.39 - 2.56*	3 *0.12*	TH, FF, SFF, SF	✓	✓	✓	✓
HDG075	65 *2.56*	95 *3.74*	7500 *16861*	10 - 65 *0.39 - 2.56*	3 *0.12*	TH, FF, SFF, SF	✓	✓	✓	✓
HDG118	80 *3.15*	120 *4.72*	11800 *26527*	10 - 65 *0.39 - 2.56*	3 *0.12*	TH, FF, SFF, SF	✓	✓	✓	✓
SEE INDIVIDUAL SPRING PAGES FOR DETAILS OF THE CORRESPONDING SIDE PORT BASE PLATES							WITH SIDE PORT BASE PLATE ONLY			

30 - 200KG
66 - 441LBS

MNE16	PAGE 24
MNE24	PAGE 25
MSL0170	PAGE 26
MSLE0170	PAGE 27
MS12	PAGE 28
MS15	PAGE 29
NG0	PAGE 30
NG1	PAGE 31
EX0170	PAGE 32
NG2	PAGE 33

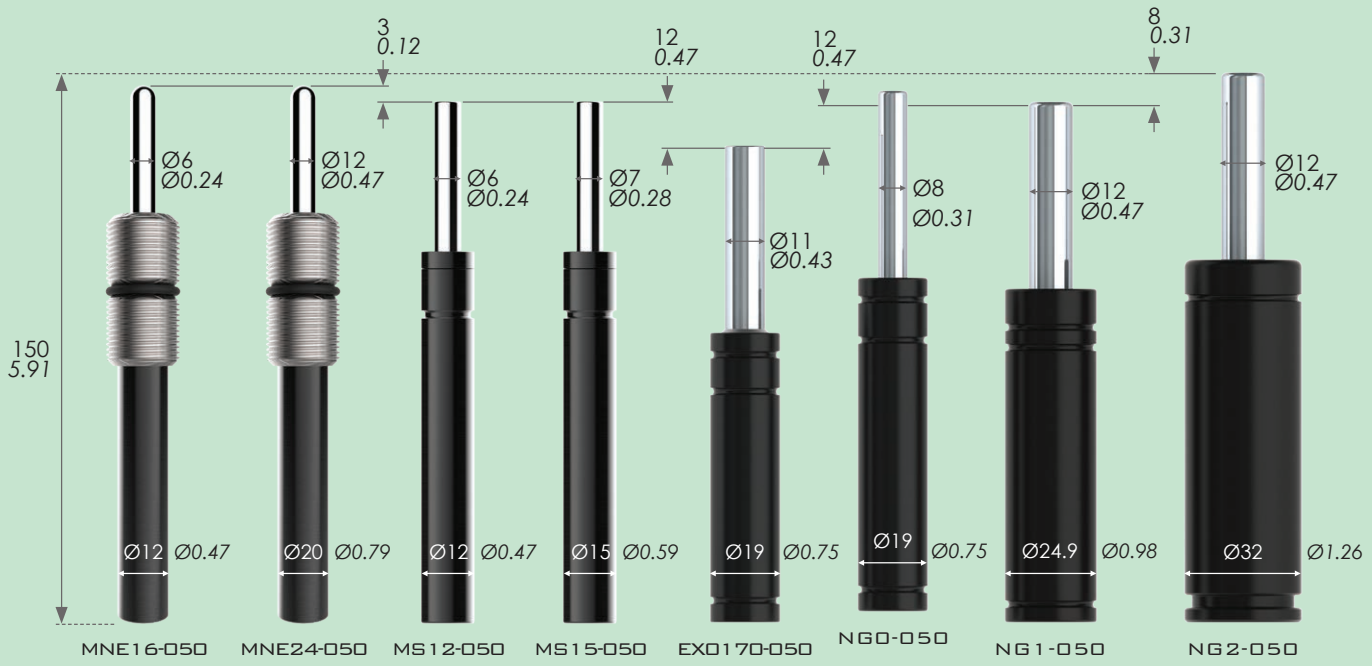

MNE16 EJECTORS
WITH THREAD LOCKING

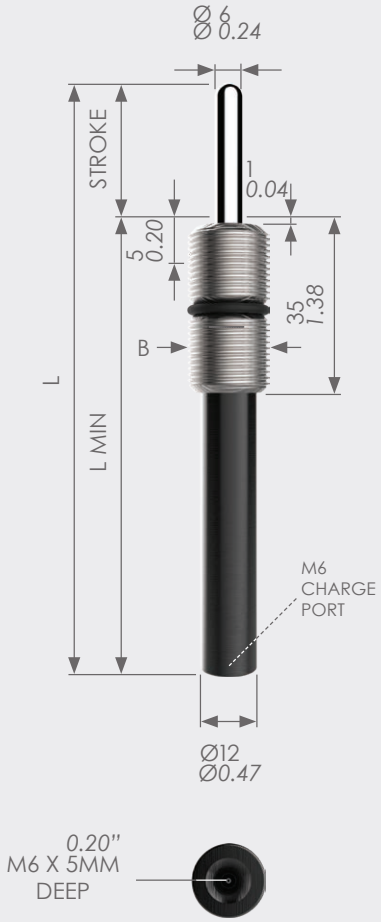

MODEL	B	CHARGING PRESSURE (bar)*(psi)*	FORCE (daN) @20˚ C		COLOUR
			INITIAL (daN) *(lbs)*	END (daN) *(lbs)*	
MNE16-(B)-020-XXX	M16 X 1.5 / M16 X 2	20 / *290*	5.7 / *13*	9.5 / *21*	Green
MNE16-(B)-040-XXX		40 / *580*	11 / *25*	19 / *43*	Blue
MNE16-(B)-075-XXX		75 / *1088*	21 / *47*	36 / *81*	Red
MNE16-(B)-150-XXX		150 / *2176*	42 / *94*	71.5 / *161*	Yellow

SPECIAL STROKE SIZES AVAILABLE UPON REQUEST

TYPE	STROKE	L MIN	L
MNE16	10 *0.39*	55 *2.17*	65 *2.56*
	20 *0.79*	65 *2.56*	85 *3.35*
	30 *1.18*	75 *2.95*	105 *4.13*
	40 *1.57*	85 *3.35*	125 *4.92*
	50 *1.97*	95 *3.74*	145 *5.71*
	60 *2.36*	105 *4.13*	165 *6.50*
	70 *2.76*	115 *4.53*	185 *7.28*
	80 *3.15*	125 *4.92*	205 *8.07*
	100 *3.94*	145 *5.71*	245 *9.65*
	125 *4.92*	170 *6.69*	295 *11.61*

ORDERING EXAMPLE: **MNE16-1.5-020-010**

USE ONLY NITROGEN

MAX. PRESSURE:	MIN. PRESSURE:	MAX. PISTON VELOCITY:
150 BAR *2176 PSI*	**12 BAR** *174 PSI*	**1.6M/SEC** *5.25ft/SEC*

ISO PED 2014/68/EU

MET 9006
EJECTOR SPRING INSTALLATION TOOL

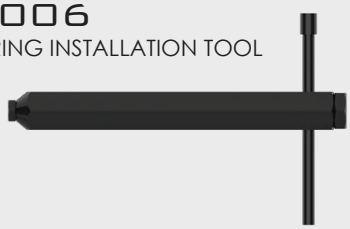

MOUNTING EXAMPLES
(all dimensions are mm, unless otherwise stated)

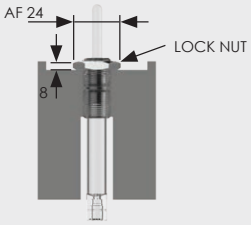

Threaded Pocket

Please note: gas springs should always be positively retained where possible.

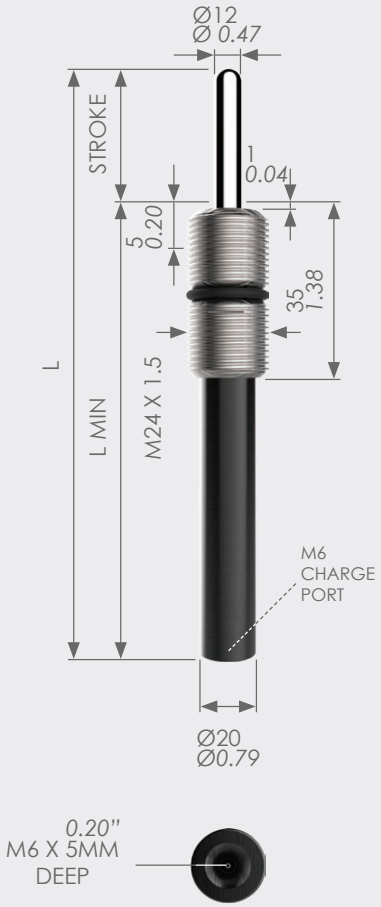

MODEL	CHARGING PRESSURE (bar)*(psi)*	FORCE (daN) @20˚ C		COLOUR
		INITIAL (daN) *(lbs)*	END (daN) *(lbs)*	
MNE24-020-XXX	**20** / *290*	**23** / *52*	**39** / *88*	**Green**
MNE24-040-XXX	**40** / *580*	**45** / *101*	**80** / *180*	**Blue**
MNE24-075-XXX	**75** / *1088*	**85** / *191*	**150** / *337*	**Red**
MNE24-150-XXX	**150** / *2176*	**170** / *382*	**290** / *652*	**Yellow**

SPECIAL STROKE SIZES AVAILABLE UPON REQUEST

TYPE	STROKE	L MIN	L
MNE24	**10** *0.39*	**55** *2.17*	**65** *2.56*
	20 *0.79*	**65** *2.56*	**85** *3.35*
	30 *1.18*	**75** *2.95*	**105** *4.13*
	40 *1.57*	**85** *3.35*	**125** *4.92*
	50 *1.97*	**95** *3.74*	**145** *5.71*
	60 *2.36*	**105** *4.13*	**165** *6.50*
	70 *2.76*	**115** *4.53*	**185** *7.28*
	80 *3.15*	**125** *4.92*	**205** *8.07*
	100 *3.94*	**145** *5.71*	**245** *9.65*
	125 *4.92*	**170** *6.69*	**295** *11.61*

ORDERING EXAMPLE: **MNE24-1.5-020-010**

USE ONLY NITROGEN

MAX. PRESSURE:	MIN. PRESSURE:	MAX. PISTON VELOCITY:
150 BAR *2176 PSI*	**6 BAR** *87 PSI*	**1.6M/SEC** *5.25ft/SEC*

ISO PED 2014/68/EU

MET 9006

EJECTOR SPRING INSTALLATION TOOL

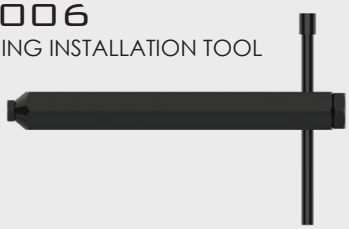

MOUNTING EXAMPLES

(all dimensions are mm, unless otherwise stated)

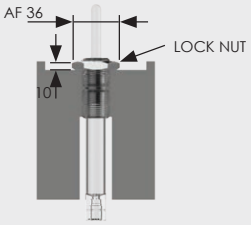

Threaded Pocket

Please note: gas springs should always be positively retained where possible.

MSL0170
STOCK LIFTERS

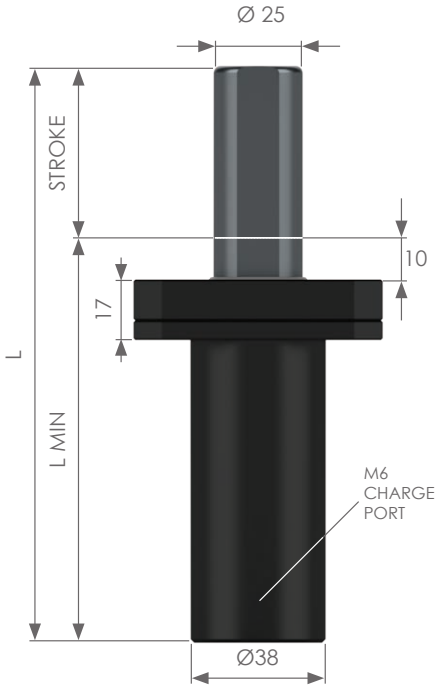

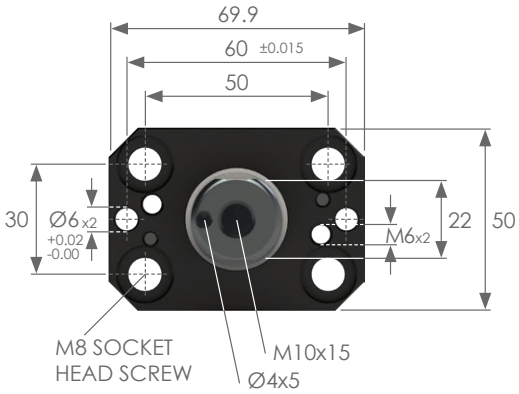

SPECIAL STROKE SIZES AVAILABLE UPON REQUEST

MODEL/STROKE	SPRING FORCE (daN)		L MIN	L	GAS VOL. (L)	WEIGHT (KG)
	INITIAL	MAXIMUM				
MSL0170-025	170	280	87	112	0.006	0.79
MSL0170-038		280	100	138	0.009	0.86
MSL0170-050		280	112	162	0.012	0.92
MSL0170-063		280	125	188	0.015	0.99
MSL0170-080		280	145	225	0.019	1.09
MSL0170-100		280	165	265	0.024	1.19
MSL0170-125		280	190	315	0.030	1.33

USE ONLY NITROGEN

MAX. PRESSURE: 180 BAR | MIN. PRESSURE: 20 BAR | MAX. PISTON VELOCITY: 1.6M/SEC

SERVICE KIT MSL0170

PED 2014/68/EU

MOUNTING EXAMPLE

Two MSL stock lifters with equal used stroke ratings can be applied.

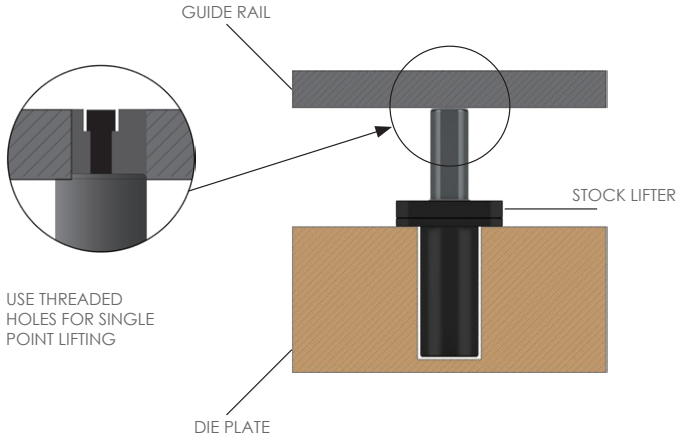

MSLE0170
STOCK LIFTERS

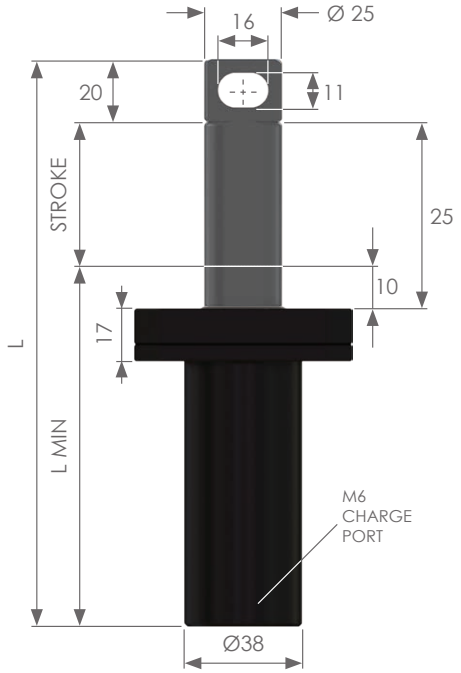

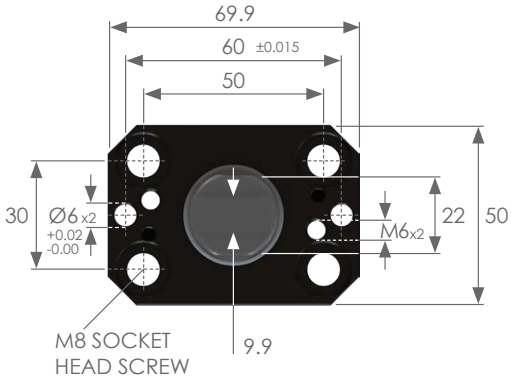

SPECIAL STROKE SIZES AVAILABLE UPON REQUEST

MODEL/STROKE	SPRING FORCE (daN)		L MIN	L	GAS VOL. (L)	WEIGHT (KG)
	INITIAL	MAXIMUM				
MSEL0170-025	170	280	102	127	0.006	0.81
MSEL0170-038		280	115	153	0.009	0.88
MSEL0170-050		280	127	177	0.012	0.94
MSEL0170-063		280	140	203	0.015	1.01
MSEL0170-080		280	160	240	0.019	1.10
MSEL0170-100		280	180	280	0.024	1.21
MSEL0170-125		280	205	330	0.030	1.35

USE ONLY NITROGEN

MAX. PRESSURE: 180 BAR | MIN. PRESSURE: 20 BAR | MAX. PISTON VELOCITY: 1.6M/SEC

SERVICE KIT MSLE0170

PED 2014/68/EU

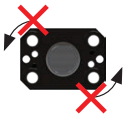

MOUNTING EXAMPLE

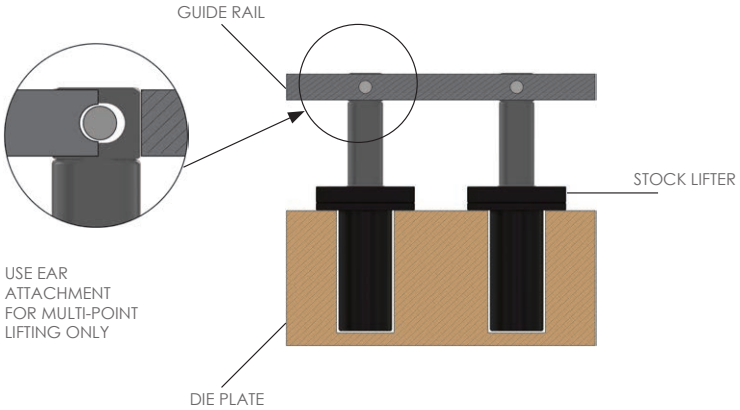

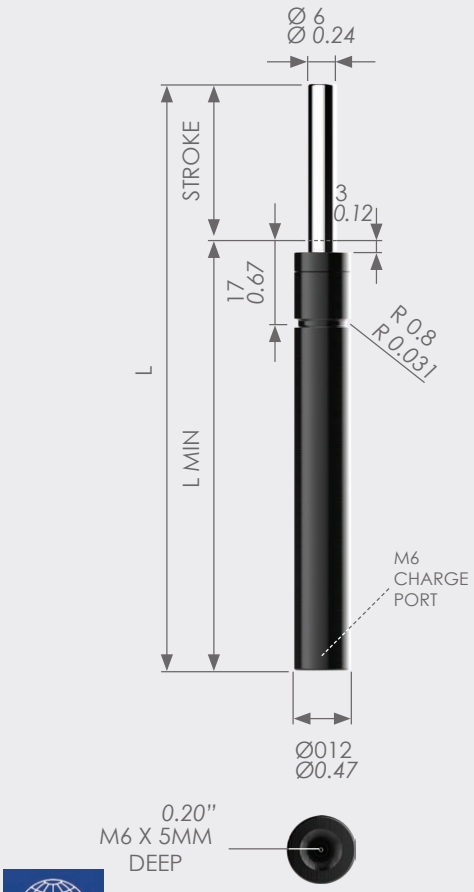

MODEL	CHARGING PRESSURE (bar)(psi)	FORCE (daN) @20˚ C		COLOUR
		INITIAL (daN) (lbs)	END (daN) (lbs)	
MS12-045-XXX	**45** / 653	**13** / 29	**18.2** / 41	Green
MS12-090-XXX	**90** / 1305	**25** / 56	**36.4** / 82	Blue
MS12-135-XXX	**135** / 1958	**38** / 85	**54.6** / 123	Red
MS12-180-XXX	**180** / 2611	**50** / 112	**72.7** / 163	Yellow

SPECIAL STROKE SIZES AVAILABLE UPON REQUEST

TYPE	STROKE	L MIN	L
MS12	**7** 0.28	**49** 1.93	**56** 2.20
	10 0.39	**52** 2.05	**62** 2.44
	12 0.47	**54.7** 2.15	**67.4** 2.65
	15 0.59	**57** 2.24	**72** 2.83
	19 0.75	**61** 2.40	**80** 3.15
	25 0.98	**67** 2.64	**92** 3.62
	38 1.50	**80** 3.15	**118** 4.65
	50 1.97	**92** 3.62	**142** 5.59
	63 2.48	**108.5** 4.27	**172** 6.77
	75 2.95	**120** 4.72	**195** 7.68
	80 3.15	**125** 4.92	**205** 8.07
	100 3.94	**145** 5.71	**245** 9.65
	125 4.92	**170** 6.69	**295** 11.61

USE ONLY NITROGEN

MAX. PRESSURE:	MIN. PRESSURE:	MAX. PISTON VELOCITY:
180 BAR *2611 PSI*	**20 BAR** *290 PSI*	**1.6M/SEC** *5.25ft/SEC*

ORDERING EXAMPLE: **MS12-045-007**

MOUNTING EXAMPLES

(all dimensions are mm, unless otherwise stated) for other possible mounting options see pages 91 - 94

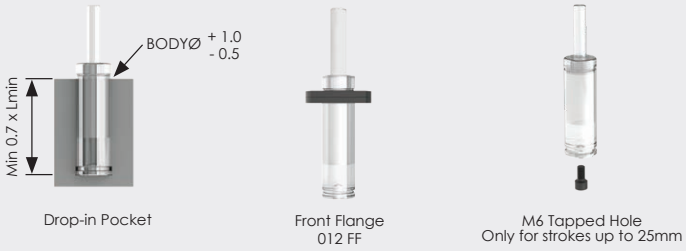

Please note: gas springs should always be positively retained where possible. How to order: Spring Type x Stroke + Mounting Type ie: MS12 x 7 + FF

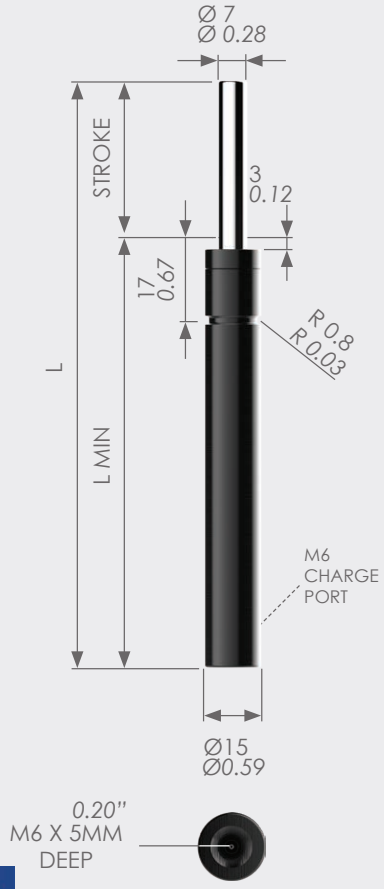

MODEL	CHARGING PRESSURE (bar)(psi)	FORCE (daN) @20˚ C		COLOUR
		INITIAL (daN) (lbs)	END (daN) (lbs)	
MS15-045-XXX	**45** / *653*	**18** / *40*	**24.9** / *56*	Green
MS15-090-XXX	**90** / *1305*	**35** / *79*	**49.8** / *112*	Blue
MS15-135-XXX	**135** / *1958*	**50** / *112*	**74.7** / *168*	Red
MS15-180-XXX	**180** / *2611*	**70** / *157*	**99.6** / *224*	Yellow

SPECIAL STROKE SIZES AVAILABLE UPON REQUEST

TYPE	STROKE	L MIN	L
MS15	**7** *0.28*	**49** *1.93*	**56** *2.20*
	10 *0.39*	**52** *2.05*	**62** *2.44*
	12 *0.47*	**55** *2.17*	**68** *2.68*
	15 *0.59*	**57** *2.24*	**72** *2.83*
	19 *0.75*	**61** *2.40*	**80** *3.15*
	25 *0.98*	**67** *2.64*	**92** *3.62*
	38 *1.50*	**80.1** *3.15*	**118.2** *4.65*
	50 *1.97*	**92** *3.62*	**142** *5.59*
	63 *2.48*	**108.5** *4.27*	**172** *6.77*
	75 *2.95*	**120** *4.72*	**195** *7.68*
	80 *3.15*	**125** *4.92*	**205** *8.07*
	100 *3.94*	**145** *5.71*	**245** *9.65*
	125 *4.92*	**170** *6.69*	**295** *11.61*

USE ONLY NITROGEN

MAX. PRESSURE:	MIN. PRESSURE:	MAX. PISTON VELOCITY:
180 BAR *2611 PSI*	**20 BAR** *290 PSI*	**1.6M/SEC** *5.25ft/SEC*

ORDERING EXAMPLE: **MS15-045-007**

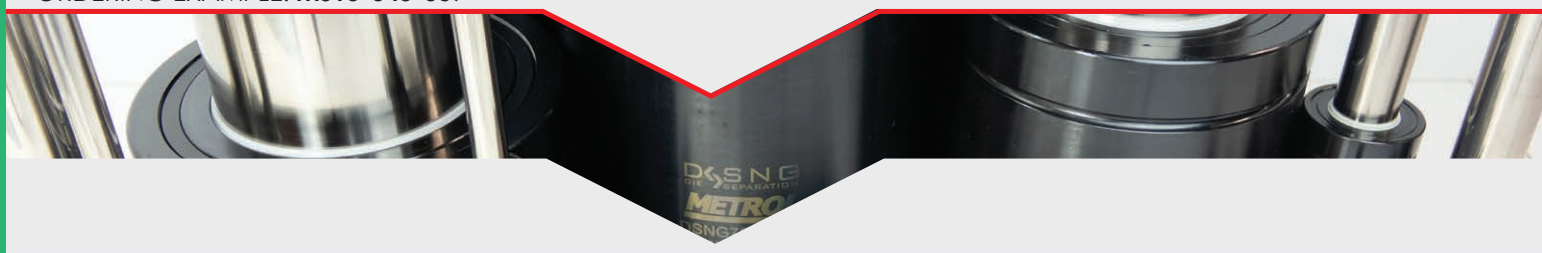

MOUNTING EXAMPLES

(all dimensions are mm, unless otherwise stated) for other possible mounting options see pages 91 - 94

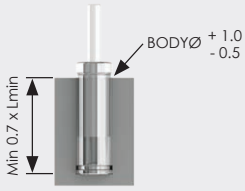

Drop-in Pocket

Front Flange
015 FF

M6 Tapped Hole
Only for strokes up to 25mm

Please note: gas springs should always be positively retained where possible. How to order: Spring Type x Stroke + Mounting Type ie: MS15 x 7 + FF

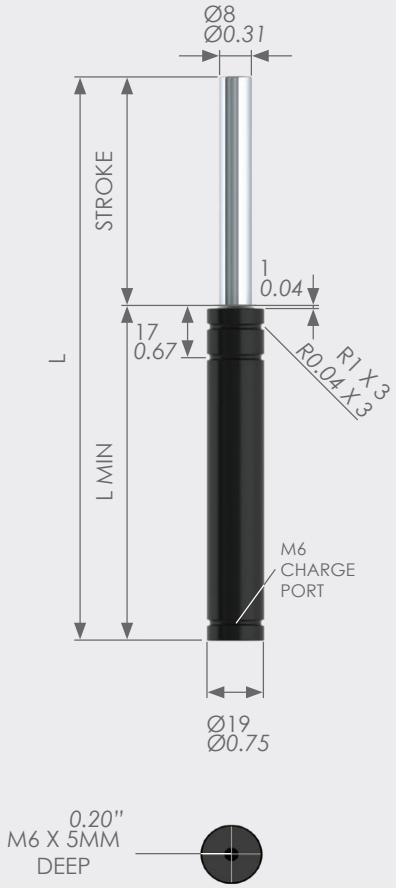

MODEL	CHARGING PRESSURE (bar)*(psi)*	FORCE (daN) @20˚ C		COLOUR
		INITIAL (daN) *(lbs)*	END (daN) *(lbs)*	
NG0-060-XXX	**60** / *870*	**30** / *67*	**43.3** / *97*	Green
NG0-100-XXX	**100** / *1450*	**50** / *112*	**71.8** / *161*	Blue
NG0-140-XXX	**140** / *2031*	**70** / *157*	**100.3** / *225*	Red
NG0-180-XXX	**180** / *2611*	**90** / *202*	**128.5** / *289*	Yellow

SPECIAL STROKE SIZES AVAILABLE UPON REQUEST

TYPE	STROKE	L MIN	L
NG0	**7** *0.28*	**49** *1.93*	**56** *2.20*
	10 *0.39*	**52** *2.05*	**62** *2.44*
	15 *0.59*	**57** *2.24*	**72** *2.83*
	25 *0.98*	**67** *2.64*	**92** *3.62*
	38 *1.50*	**80.1** *3.15*	**118.2** *4.65*
	50 *1.97*	**92** *3.62*	**142** *5.59*
	63 *2.48*	**108.5** *4.27*	**172** *6.77*
	80 *3.15*	**125** *4.92*	**205** *8.07*
	100 *3.94*	**145** *5.71*	**245** *9.65*
	125 *4.92*	**170** *6.69*	**295** *11.61*

ORDERING EXAMPLE: **NG0-060-007**

USE ONLY NITROGEN

MAX. PRESSURE:	MIN. PRESSURE:	MAX. PISTON VELOCITY:
180 BAR *2611 PSI*	**20 BAR** *290 PSI*	**1.6M/SEC** *5.25ft/SEC*

ISO PED 2014/68/EU

SRS
SECONDARY ROD SCRAPER

PREVENT **DUST, DIRT AND OIL** FROM REDUCING THE LIFE OF YOUR GAS SPRINGS

CODE: SRS-8

MOUNTING EXAMPLES

(all dimensions are mm, unless otherwise stated)
for other possible mounting options see pages 91 - 94

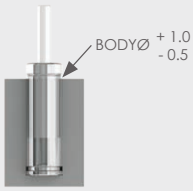

Drop-in Pocket

M6 Tapped Hole
Only for strokes up to 25mm

Front Flange
19 FF

Please note: gas springs should always be positively retained where possible. How to order: Spring Type x Stroke + Mounting Type ie: NG0 x 7 + FF

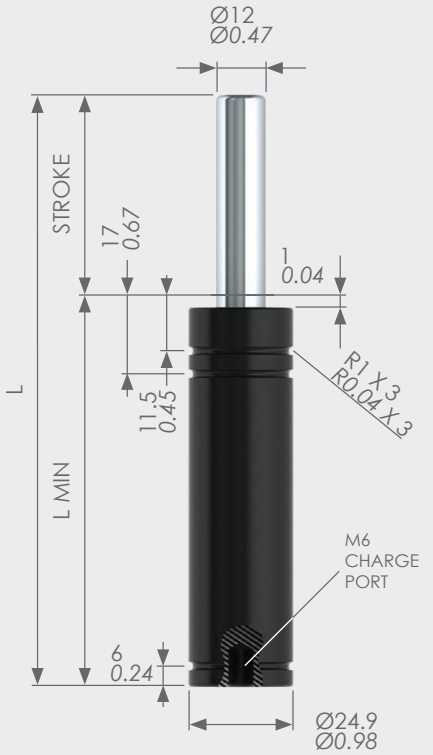

MODEL	CHARGING PRESSURE (bar)*(psi)*	FORCE (daN) @20˚ C		COLOUR
		INITIAL (daN) *(lbs)*	END (daN) *(lbs)*	
NG1-050-XXX	**45** / *653*	**50** / *112*	**76.6** / *172*	Green
NG1-100-XXX	**90** / *1305*	**100** / *225*	**153.2** / *344*	Blue
NG1-150-XXX	**135** / *1958*	**150** / *337*	**230** / *517*	Red
NG1-200-XXX	**180** / *2611*	**200** / *450*	**306.4** / *689*	Yellow

SPECIAL STROKE SIZES AVAILABLE UPON REQUEST

TYPE	STROKE	L MIN	L
NG1	**10** *0.39*	**52** *2.05*	**62** *2.44*
	13 *0.51*	**54.7** *2.15*	**67.4** *2.65*
	15 *0.59*	**57** *2.24*	**72** *2.83*
	16 *0.63*	**58** *2.28*	**74** *2.91*
	25 *0.98*	**67** *2.64*	**92** *3.62*
	38 *1.50*	**80.1** *3.15*	**118.2** *4.65*
	50 *1.97*	**92** *3.62*	**142** *5.59*
	63 *2.48*	**108.5** *4.27*	**172** *6.77*
	80 *3.15*	**125** *4.92*	**205** *8.07*
	100 *3.94*	**145** *5.71*	**245** *9.65*
	125 *4.92*	**170** *6.69*	**295** *11.61*
	150 *5.91*	**203** *7.99*	**353** *13.90*
	160 *6.30*	**213** *8.39*	**373** *14.69*
	175 *6.89*	**228** *8.98*	**403** *15.87*
	200 *7.87*	**253** *9.96*	**453** *17.83*

ISO

PED 2014/68/EU

USE ONLY NITROGEN

MAX. PRESSURE:	MIN. PRESSURE:	MAX. PISTON VELOCITY:
180 BAR *2611 PSI*	**20 BAR** *290 PSI*	**1.6M/SEC** *5.25ft/SEC*

ORDERING EXAMPLE: **NG1-050-010**

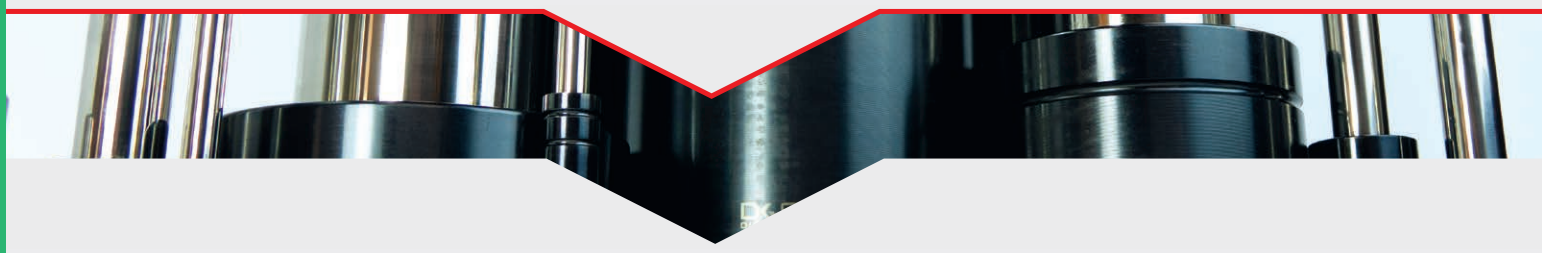

SRS SECONDARY ROD SCRAPER

PREVENT **DUST, DIRT AND OIL** FROM REDUCING THE LIFE OF YOUR GAS SPRINGS

CODE: SRS-12

MOUNTING EXAMPLES

(all dimensions are mm, unless otherwise stated)
for other possible mounting options see pages 91 - 94

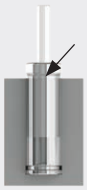

Drop-in Pocket

Front Flange
25 FF

M6 Tapped Hole
Only for strokes up to 25mm

End Support
25 ES

Please note: gas springs should always be positively retained where possible. How to order: Spring Type x Stroke + Mounting Type ie: NG1 x 25 + FF

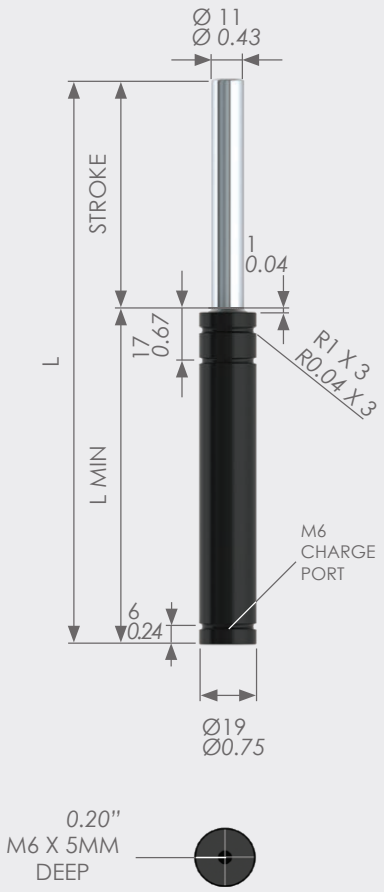

MODEL/STROKE	SPRING FORCE (daN) INITIAL (daN) *(lbs)*	SPRING FORCE (daN) MAXIMUM (daN) *(lbs)*	L MIN (MM) *(in.)*	L (MM) *(in.)*	GAS VOL. (L)	WEIGHT (KG) *(lbs)*
EX0170-007	**170** *382*	**280** *629*	**37** *1.46*	**44** *1.73*	**0.002**	**0.06** *0.13*
EX0170-010		**280** *629*	**40** *1.57*	**50** *1.97*	**0.002**	**0.06** *0.13*
EX0170-013		**280** *629*	**43** *1.69*	**56** *2.20*	**0.003**	**0.07** *0.15*
EX0170-015		**280** *629*	**45** *1.77*	**60** *2.36*	**0.004**	**0.07** *0.15*
EX0170-019		**280** *629*	**49** *1.93*	**68** *2.68*	**0.005**	**0.07** *0.15*
EX0170-025		**280** *629*	**55** *2.17*	**80** *3.15*	**0.006**	**0.08** *0.18*
EX0170-032		**280** *629*	**62** *2.44*	**94** *3.70*	**0.008**	**0.09** *0.20*
EX0170-038		**280** *629*	**68** *2.68*	**106** *4.17*	**0.009**	**0.09** *0.20*
EX0170-050		**280** *629*	**80** *3.15*	**130** *5.12*	**0.012**	**0.10** *0.22*
EX0170-063		**280** *629*	**93** *3.66*	**156** *6.14*	**0.015**	**0.12** *0.26*
EX0170-075		**280** *629*	**110** *4.33*	**185** *7.28*	**0.018**	**0.13** *0.29*
EX0170-080		**280** *629*	**115** *4.53*	**195** *7.68*	**0.019**	**0.14** *0.31*
EX0170-100		**280** *629*	**135** *5.31*	**235** *9.25*	**0.024**	**0.16** *0.35*
EX0170-125		**280** *629*	**160** *6.30*	**285** *11.22*	**0.030**	**0.19** *0.42*

SPECIAL STROKE SIZES AVAILABLE UPON REQUEST

ORDERING EXAMPLE: **EX0170-007**

USE ONLY NITROGEN

MAX. PRESSURE:	MIN. PRESSURE:	MAX. PISTON VELOCITY:
180 BAR *2611 PSI*	**20 BAR** *290 PSI*	**1.6M/SEC** *5.25ft/SEC*

ISO PED 2014/68/EU

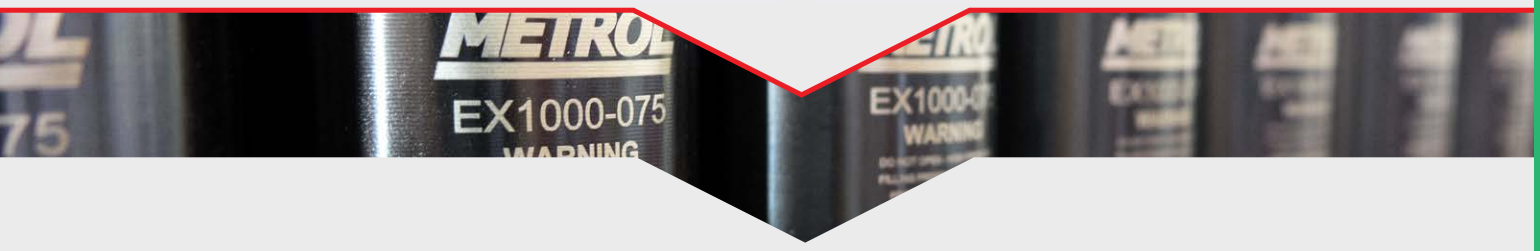

SRS
SECONDARY ROD SCRAPER

PREVENT **DUST, DIRT AND OIL** FROM REDUCING THE LIFE OF YOUR GAS SPRINGS

CODE: SRS-11

MOUNTING EXAMPLES

(all dimensions are mm, unless otherwise stated)
for other possible mounting options see pages 91 - 94

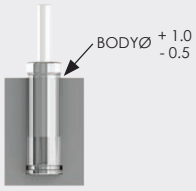

Drop-in Pocket

Front Flange
019 FF

M6 Tapped Hole
Only for strokes up to 25mm

Please note: gas springs should always be positively retained where possible. How to order: Spring Type x Stroke + Mounting Type ie: EX0170 X 007 + FF

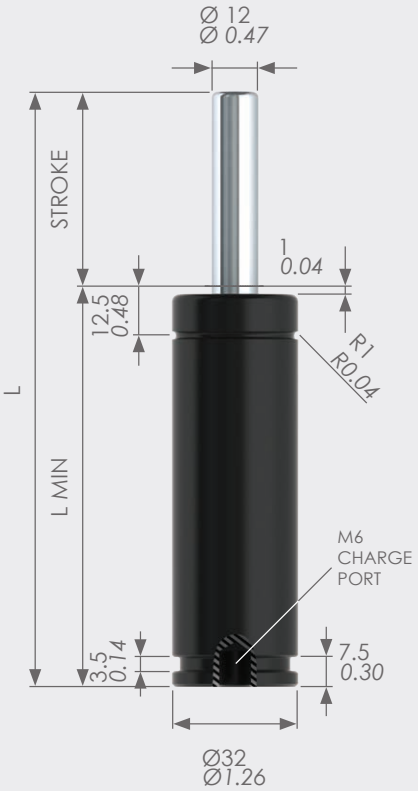

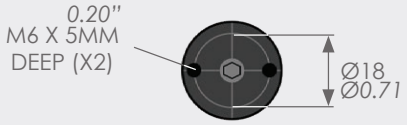

MODEL	CHARGING PRESSURE (bar)*(psi)*	FORCE (daN) @20˚ C		COLOUR
		INITIAL (daN) *(lbs)*	END (daN) *(lbs)*	
NG2-050-XXX	**45** / *653*	**50** / *112*	**76.6** / *172*	Green
NG2-100-XXX	**90** / *1305*	**100** / *225*	**153.1** / *344*	Blue
NG2-150-XXX	**135** / *1958*	**150** / *337*	**229.9** / *517*	Red
NG2-200-XXX	**180** / *2611*	**200** / *450*	**306.3** / *689*	Yellow

SPECIAL STROKE SIZES AVAILABLE UPON REQUEST

TYPE	STROKE	L MIN	L
NG2	**10** *0.39*	**60** *2.36*	**70** *2.76*
	12 *0.47*	**62.7** *2.47*	**75.4** *2.97*
	16 *0.63*	**66** *2.60*	**82** *3.23*
	25 *0.98*	**75** *2.95*	**100** *3.94*
	38 *1.50*	**88.1** *3.47*	**126.2** *4.97*
	50 *1.97*	**100** *3.94*	**150** *5.91*
	63 *2.48*	**113.5** *4.47*	**177** *6.97*
	80 *3.15*	**130** *5.12*	**210** *8.27*
	100 *3.94*	**150** *5.91*	**250** *9.84*
	125 *4.92*	**175** *6.89*	**300** *11.81*

USE ONLY NITROGEN

MAX. PRESSURE:	MIN. PRESSURE:	MAX. PISTON VELOCITY:
180 BAR *2611 PSI*	**20 BAR** *290 PSI*	**1.6M/SEC** *5.25ft/SEC*

ISO PED 2014/68/EU

ORDERING EXAMPLE: **NG2-050-010**

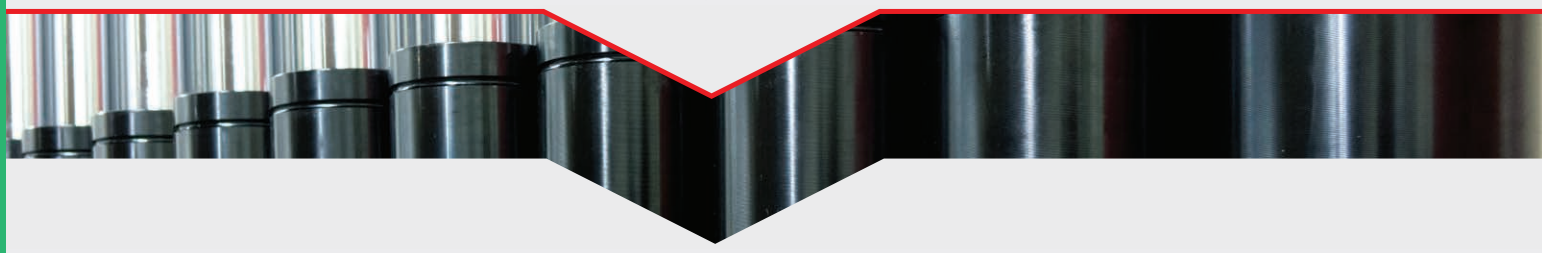

MOUNTING EXAMPLES

(all dimensions are mm, unless otherwise stated) for other possible mounting options see pages 91 - 94

M6 Tapped Hole

Square Front Flange
32 SFF

Front Flange
32 FF

Square Flange
32 SF

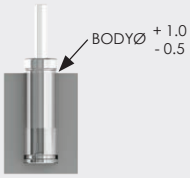

Drop-in Pocket

Please note: gas springs should always be positively retained where possible. How to order: Spring Type x Stroke + Mounting Type ie: NG2 x 10 + FF

CONTENTS

250 - 420KG
551 - 926LBS

ISNG0250	PAGE 35
PLJ0300	PAGE 36
PL0300	PAGE 37
EX0320	PAGE 38
EX0360	PAGE 39
G-EX0360	PAGE 40
HDG0042	PAGE 41

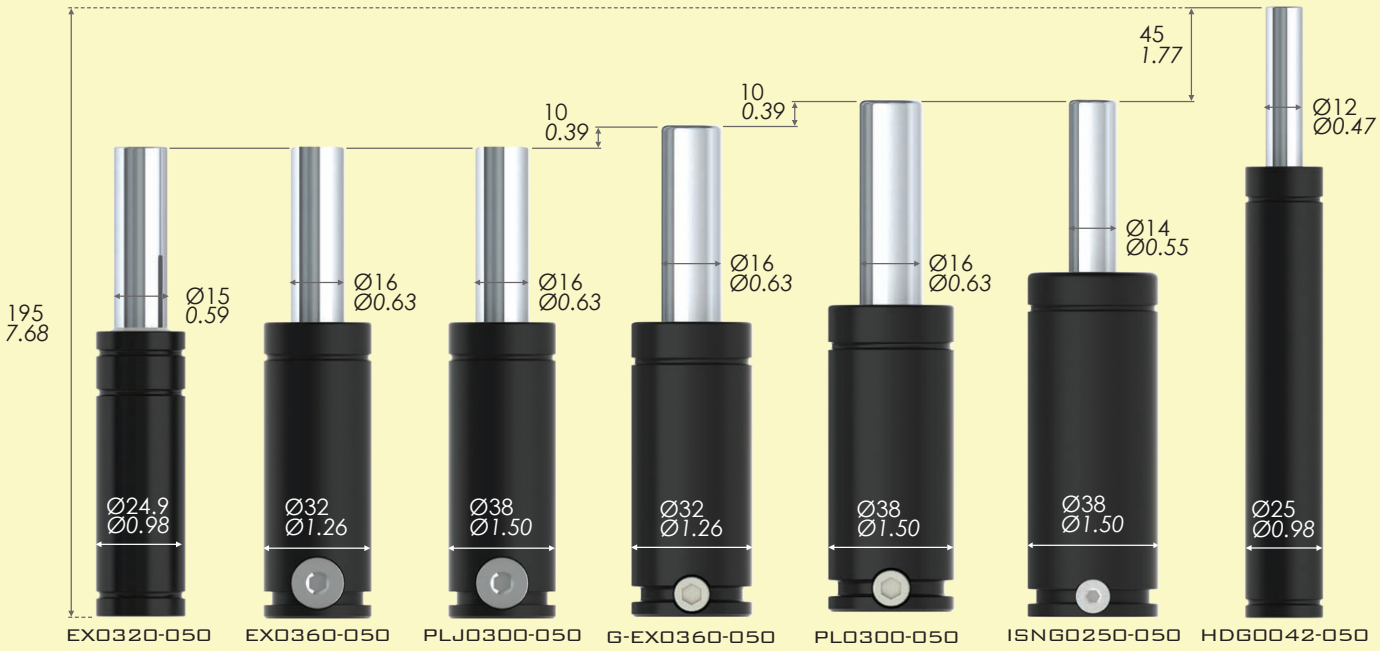

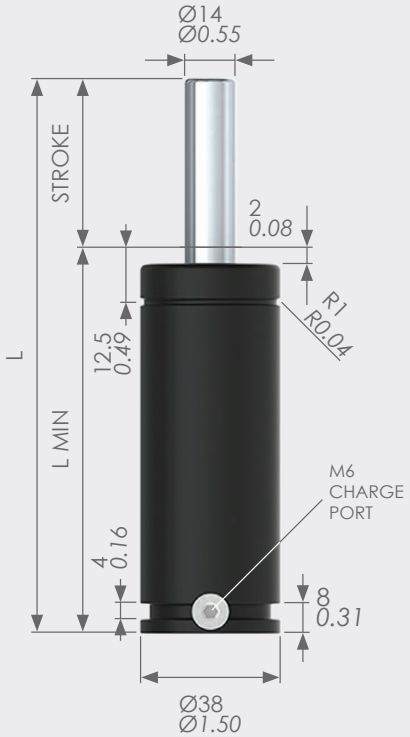

MODEL/STROKE	SPRING FORCE (daN)		L MIN (MM) *(in.)*	L (MM) *(in.)*	GAS VOL. (L)	WEIGHT (KG) *(lbs)*
	INITIAL (daN) *(lbs)*	MAXIMUM (daN) *(lbs)*				
ISNG0250-010	**265** *596*	**350** *787*	**60** *2.36*	**70** *2.76*	**0.011**	**0.40** *0.88*
ISNG0250-013		**350** *787*	**62.7** *2.47*	**75.4** *2.97*	**0.013**	**0.42** *0.93*
ISNG0250-016		**350** *787*	**66** *2.60*	**82** *3.23*	**0.016**	**0.45** *0.99*
ISNG0250-025		**350** *787*	**75** *2.95*	**100** *3.94*	**0.023**	**0.48** *1.06*
ISNG0250-038		**350** *787*	**88.1** *3.47*	**126.2** *4.97*	**0.032**	**0.55** *1.21*
ISNG0250-050		**350** *787*	**100** *3.94*	**150** *5.91*	**0.041**	**0.61** *1.34*
ISNG0250-063		**350** *787*	**113.5** *4.47*	**177** *6.97*	**0.051**	**0.67** *1.48*
ISNG0250-080		**350** *787*	**130** *5.12*	**210** *8.27*	**0.062**	**0.74** *1.63*
ISNG0250-100		**350** *787*	**150** *5.91*	**250** *9.84*	**0.077**	**0.87** *1.92*
ISNG0250-125		**350** *787*	**175** *6.89*	**300** *11.81*	**0.096**	**0.97** *2.14*

SPECIAL STROKE SIZES AVAILABLE UPON REQUEST

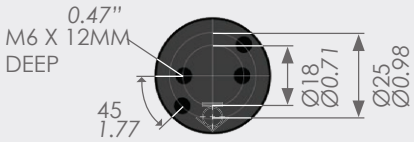

USE ONLY NITROGEN

MAX. PRESSURE:	MIN. PRESSURE:	MAX. PISTON VELOCITY:
150 BAR *2176 PSI*	**20 BAR** *290 PSI*	**1.6M/SEC** *5.25ft/SEC*

SERVICE KIT ISNG0250

ISO

PED 2014/68/EU

MOUNTING EXAMPLES

(all dimensions are mm, unless otherwise stated) for other possible mounting options see pages 91 - 94

2 X M6 Tapped Holes

Square Front Flange
38 SFF

Front Flange
38 FF

Square Flange
38 SF

End Support
38 ES

Please note: gas springs should always be positively retained where possible. How to order: Spring Type x Stroke + Mounting Type ie: ISNG0250 x 010 + FF

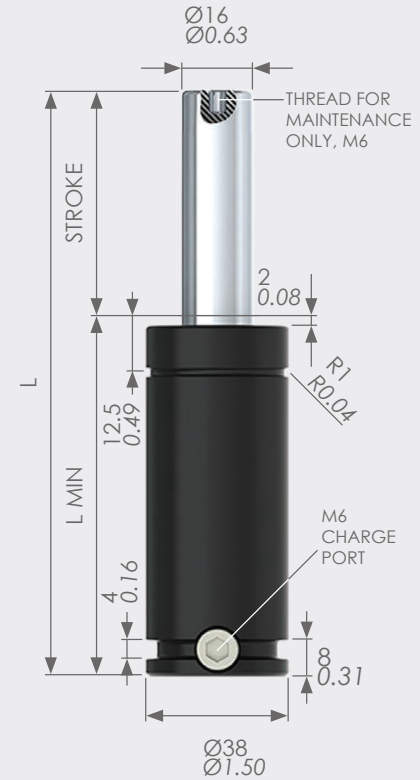

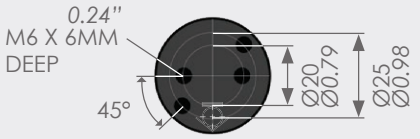

MODEL	FORCE (daN) @20˚ C	
	INITIAL (daN) *(lbs)*	END (daN) *(lbs)*
PLJ0300-20-XXX	**47** / *106*	-
PLJ0300-25-XXX	**58** / *130*	-
PLJ0300-50-XXX	**116** / *261*	-
PLJ0300-75-XXX	**175** / *393*	-
PLJ0300-100-XXX	**233** / *524*	-
PLJ0300-125-XXX	**291** / *654*	-
PLJ0300-150-XXX	**350** / *787*	-

SPECIAL STROKE SIZES AVAILABLE UPON REQUEST

TYPE	STROKE	L MIN	L
PLJ0300	**12.5** *0.49*	**42** *1.65*	**55** *2.17*
	15 *0.59*	**45** *1.77*	**60** *2.36*
	19 *0.75*	**49** *1.93*	**68** *2.68*
	25 *0.98*	**55** *2.17*	**80** *3.15*
	32 *1.26*	**64** *2.52*	**96** *3.78*
	37.5 *1.48*	**67** *2.64*	**105** *4.13*
	50 *1.97*	**80** *3.15*	**130** *5.12*
	62.5 *2.46*	**92** *3.62*	**155** *6.10*
	75 *2.95*	**105** *4.13*	**180** *7.09*
	80 *3.15*	**110** *4.33*	**190** *7.48*
	100.5 *3.96*	**131** *5.16*	**231** *9.09*
	125 *4.92*	**155** *6.10*	**280** *11.02*

USE ONLY NITROGEN

MAX. PRESSURE:	MIN. PRESSURE:	MAX. PISTON VELOCITY:
150 BAR *2176 PSI*	**20 BAR** *290 PSI*	**1.6M/SEC** *5.25ft/SEC*

SERVICE KIT PLJ0300

PED 2014/68/EU

PROTECTION

CODE: SRS-16-A

MOUNTING EXAMPLES

(all dimensions are mm, unless otherwise stated)
for other possible mounting options see pages 91 - 94

4 X M6 Tapped Holes

Square Front Flange 38 SFF

Front Flange 38 FF

Square Flange 38 SF

End Support 38 ES

Please note: gas springs should always be positively retained where possible. How to order: Spring Type x Stroke + Mounting Type ie: PLJ0300 x 013 + FF

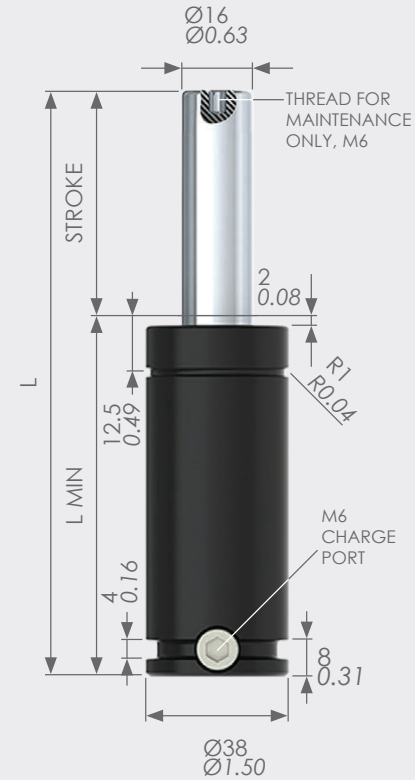

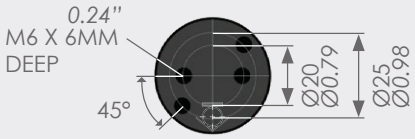

MODEL	FORCE (daN) @20˚ C	
	INITIAL (daN) *(lbs)*	END (daN) *(lbs)*
PL0300-20-XXX	**47** / *106*	-
PL0300-25-XXX	**58** / *130*	-
PL0300-50-XXX	**116** / *261*	-
PL0300-75-XXX	**175** / *393*	-
PL0300-100-XXX	**233** / *524*	-
PL0300-125-XXX	**291** / *654*	-
PL0300-150-XXX	**350** / *787*	-

SPECIAL STROKE SIZES AVAILABLE UPON REQUEST

TYPE	STROKE	L MIN	L
PL0300	**10** *0.39*	**60.5** *2.38*	**70.5** *2.78*
	12.5 *0.49*	**62.5** *2.46*	**75.5** *2.97*
	16 *0.63*	**66.5** *2.62*	**82.5** *3.25*
	19 *0.75*	**69.5** *2.74*	**88.5** *3.48*
	25 *0.98*	**75.5** *2.97*	**100.5** *3.96*
	37.5 *1.48*	**87.5** *3.44*	**125.5** *4.94*
	50 *1.97*	**100.5** *3.96*	**150.5** *5.93*
	62.5 *2.46*	**112.5** *4.43*	**175.5** *6.91*
	75 *2.95*	**125.5** *4.94*	**200.5** *7.89*
	80 *3.15*	**130.5** *5.14*	**210.5** *8.29*
	100 *3.94*	**150.5** *5.93*	**250.5** *9.86*
	125 *4.92*	**175.5** *6.91*	**300.5** *11.83*

USE ONLY NITROGEN

MAX. PRESSURE:	MIN. PRESSURE:	MAX. PISTON VELOCITY:
150 BAR *2176 PSI*	**20 BAR** *290 PSI*	**1.6M/SEC** *5.25ft/SEC*

SERVICE KIT PL0300

PED 2014/68/EU

PROTECTION

CODE: SRS-16-A

MOUNTING EXAMPLES

(all dimensions are mm, unless otherwise stated)
for other possible mounting options see pages 91 - 94

4 X M6 Tapped Holes

Square Front Flange
38 SFF

Front Flange
38 FF

Square Flange
38 SF

End Support
38 ES

Please note: gas springs should always be positively retained where possible. How to order: Spring Type x Stroke + Mounting Type ie:PL0300 x 010 + FF

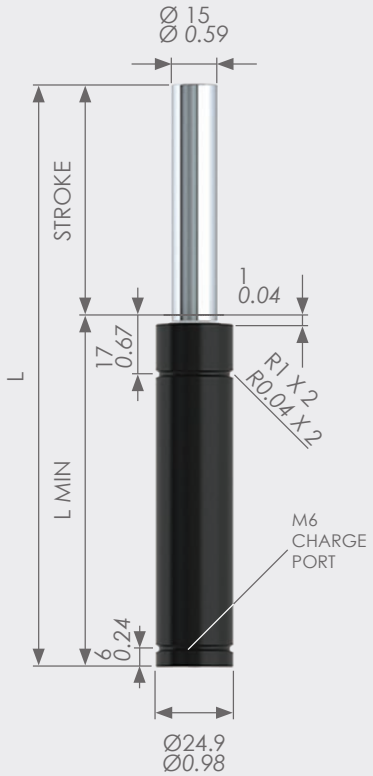

MODEL/STROKE	SPRING FORCE (daN) INITIAL (daN) *(lbs)*	SPRING FORCE (daN) MAXIMUM (daN) *(lbs)*	L MIN (MM) *(in.)*	L (MM) *(in.)*	GAS VOL. (L)	WEIGHT (KG) *(lbs)*
EX0320-007	**320** *719*	**480** *1079*	**37** *1.46*	**44** *1.73*	**0.004**	**0.09** *0.20*
EX0320-010		**490** *1102*	**40** *1.57*	**50** *1.97*	**0.005**	**0.10** *0.22*
EX0320-013		**500** *1124*	**43** *1.69*	**56** *2.20*	**0.006**	**0.10** *0.22*
EX0320-015		**510** *1147*	**45** *1.77*	**60** *2.36*	**0.007**	**0.10** *0.22*
EX0320-019		**510** *1147*	**49** *1.93*	**68** *2.68*	**0.009**	**0.11** *0.24*
EX0320-025		**520** *1169*	**55** *2.17*	**80** *3.15*	**0.011**	**0.12** *0.26*
EX0320-032		**530** *1191*	**62** *2.44*	**94** *3.70*	**0.014**	**0.13** *0.29*
EX0320-038		**530** *1191*	**68** *2.68*	**106** *4.17*	**0.017**	**0.14** *0.31*
EX0320-050		**530** *1191*	**80** *3.15*	**130** *5.12*	**0.022**	**0.17** *0.37*
EX0320-063		**530** *1191*	**93** *3.66*	**156** *6.14*	**0.028**	**0.19** *0.42*
EX0320-075		**530** *1191*	**110** *4.33*	**185** *7.28*	**0.034**	**0.21** *0.46*
EX0320-080		**530** *1191*	**115** *4.53*	**195** *7.68*	**0.036**	**0.23** *0.51*
EX0320-100		**530** *1191*	**135** *5.31*	**235** *9.25*	**0.044**	**0.25** *0.55*
EX0320-125		**530** *1191*	**160** *6.30*	**285** *11.22*	**0.055**	**0.30** *0.66*

SPECIAL STROKE SIZES AVAILABLE UPON REQUEST

USE ONLY NITROGEN

MAX. PRESSURE:	MIN. PRESSURE:	MAX. PISTON VELOCITY:
180 BAR *2611 PSI*	**20 BAR** *290 PSI*	**1.6M/SEC** *5.25ft/SEC*

ISO PED 2014/68/EU

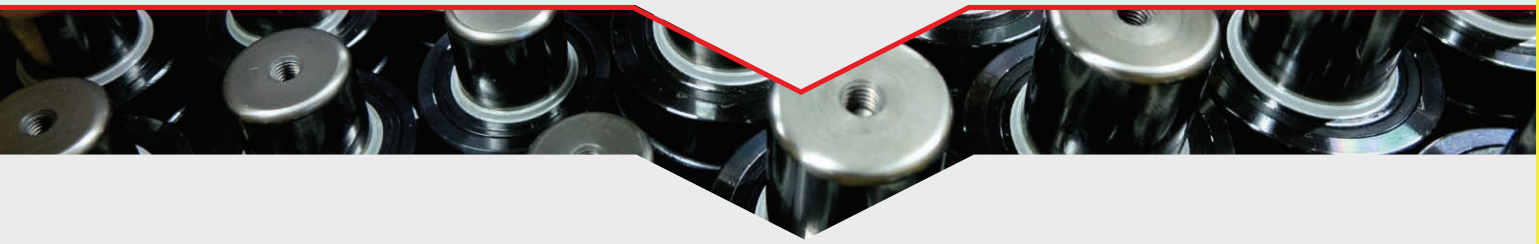

PROTECTION

CODE: SRS-15

MOUNTING EXAMPLES

(all dimensions are mm, unless otherwise stated)
for other possible mounting options see pages 91 - 94

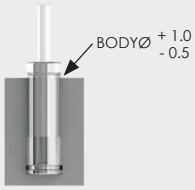

Drop-in Pocket

Front Flange
25 FF

M6 Tapped Hole
Only for strokes up to 25mm

End Support
25 ES

Please note: gas springs should always be positively retained where possible. How to order: Spring Type x Stroke + Mounting Type ie: EX0320 x 007 + FF

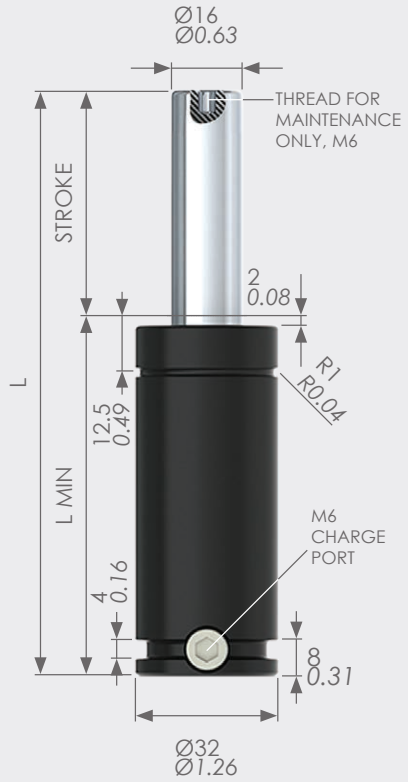

MODEL/STROKE	SPRING FORCE (daN)		L MIN (MM) (in.)	L (MM) (in.)	GAS VOL. (L)	WEIGHT (KG) (lbs)
	INITIAL (daN) (lbs)	MAXIMUM (daN) (lbs)				
EX0360-010	**360**	**590**	**40**	**50**	**0.01**	**0.18**
	809	*1326*	*1.57*	*1.97*		*0.40*
EX0360-013		**520**	**43**	**56**	**0.01**	**0.18**
		1169	*1.69*	*2.20*		*0.40*
EX0360-016		**530**	**46**	**62**	**0.01**	**0.19**
		1191	*1.81*	*2.44*		*0.42*
EX0360-019		**560**	**49**	**68**	**0.01**	**0.20**
		1259	*1.93*	*2.68*		*0.44*
EX0360-025		**550**	**55**	**80**	**0.02**	**0.23**
		1236	*2.17*	*3.15*		*0.51*
EX0360-032		**550**	**62**	**94**	**0.02**	**0.25**
		1236	*2.44*	*3.70*		*0.55*
EX0360-038		**550**	**68**	**106**	**0.03**	**0.27**
		1236	*2.68*	*4.17*		*0.60*
EX0360-050		**560**	**80**	**130**	**0.03**	**0.31**
		1259	*3.15*	*5.12*		*0.68*
EX0360-063		**550**	**93**	**156**	**0.04**	**0.36**
		1236	*3.66*	*6.14*		*0.79*
EX0360-075		**550**	**105**	**180**	**0.05**	**0.40**
		1236	*4.13*	*7.09*		*0.88*
EX0360-080		**550**	**110**	**190**	**0.05**	**0.42**
		1236	*4.33*	*7.48*		*0.93*
EX0360-100		**550**	**130**	**230**	**0.06**	**0.49**
		1236	*5.12*	*9.06*		*1.08*
EX0360-125		**550**	**155**	**280**	**0.08**	**0.59**
		1236	*6.10*	*11.02*		*1.30*

SPECIAL STROKE SIZES AVAILABLE UPON REQUEST

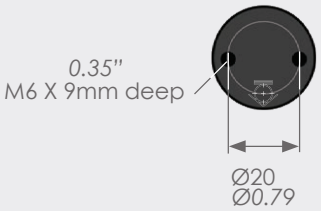

USE ONLY NITROGEN

MAX. PRESSURE:	MIN. PRESSURE:	MAX. PISTON VELOCITY:
150 BAR *2176 PSI*	**20 BAR** *290 PSI*	**1.6M/SEC** *5.25ft/SEC*

SERVICE KIT EX0360

ISO PED 2014/68/EU

PROTECTION

CODE: SRS-16

MOUNTING EXAMPLES

(all dimensions are mm, unless otherwise stated)
for other possible mounting options see pages 91 - 94

2 X M6 Tapped Holes

Square Front Flange
32 SFF

Front Flange
32 FF

Square Flange
32 SF

Please note: gas springs should always be positively retained where possible. How to order: Spring Type x Stroke + Mounting Type ie: EX0360 x 010 + FF

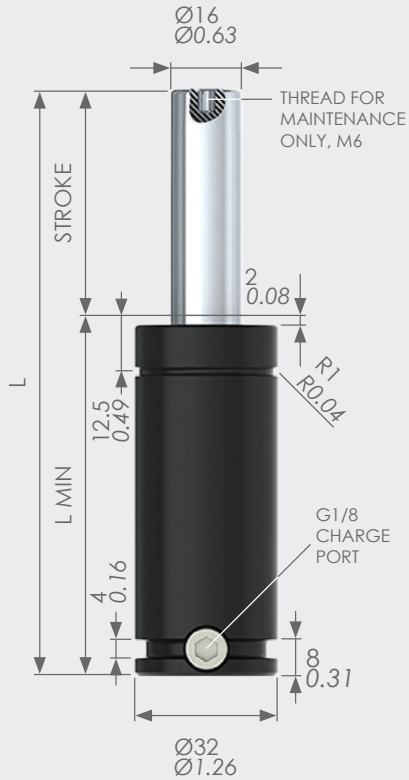

MODEL/STROKE	SPRING FORCE (daN)		L MIN (MM) (in.)	L (MM) (in.)	GAS VOL. (L)	WEIGHT (KG) (lbs)
	INITIAL (daN) (lbs)	MAXIMUM (daN) (lbs)				
G-EX0360-010	**360** *809*	**590** *1326*	**50** *1.97*	**60** *2.36*	**0.01**	**0.17** *0.37*
G-EX0360-013		**520** *1169*	**53** *2.09*	**66** *2.60*	**0.01**	**0.18** *0.40*
G-EX0360-016		**530** *1191*	**56** *2.20*	**72** *2.83*	**0.01**	**0.19** *0.42*
G-EX0360-019		**560** *1259*	**59** *2.32*	**78** *3.07*	**0.01**	**0.20** *0.44*
G-EX0360-025		**550** *1236*	**65** *2.56*	**90** *3.54*	**0.02**	**0.22** *0.49*
G-EX0360-032		**550** *1236*	**72** *2.83*	**104** *4.09*	**0.02**	**0.26** *0.57*
G-EX0360-038		**550** *1236*	**78** *3.07*	**116** *4.57*	**0.03**	**0.30** *0.66*
G-EX0360-050		**560** *1259*	**90** *3.54*	**140** *5.51*	**0.03**	**0.35** *0.77*
G-EX0360-063		**550** *1236*	**103** *4.06*	**166** *6.54*	**0.04**	**0.38** *0.84*
G-EX0360-075		**550** *1236*	**115** *4.53*	**190** *7.48*	**0.05**	**0.40** *0.88*
G-EX0360-080		**550** *1236*	**120** *4.72*	**200** *7.87*	**0.05**	**0.42** *0.93*
G-EX0360-100		**550** *1236*	**140** *5.51*	**240** *9.45*	**0.06**	**0.45** *0.99*
G-EX0360-125		**550** *1236*	**165** *6.50*	**290** *11.42*	**0.08**	**0.52** *1.15*

SPECIAL STROKE SIZES AVAILABLE UPON REQUEST

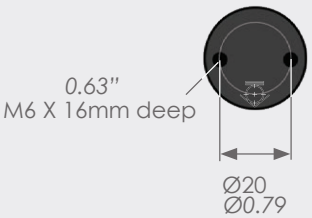

USE ONLY NITROGEN

MAX. PRESSURE:	MIN. PRESSURE:	MAX. PISTON VELOCITY:
150 BAR *2176 PSI*	**20 BAR** *290 PSI*	**1.6M/SEC** *5.25ft/SEC*

SERVICE KIT G-EX0360

PED 2014/68/EU

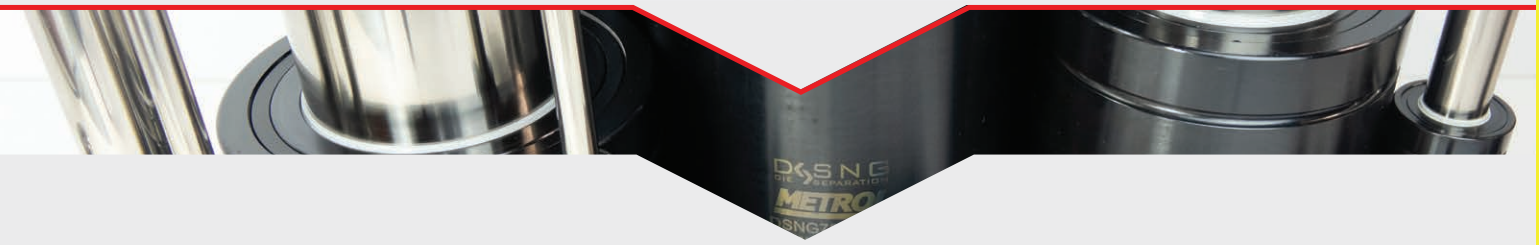

PROTECTION

CODE: SRS-16

MOUNTING EXAMPLES

(all dimensions are mm, unless otherwise stated)
for other possible mounting options see pages 91 - 94

2 X M6 Tapped Holes

Square Front Flange
32 SFF

Front Flange
32 FF

Square Flange
32 SF

Please note: gas springs should always be positively retained where possible. How to order: Spring Type x Stroke + Mounting Type ie: G-EX0360 x 010 + FF

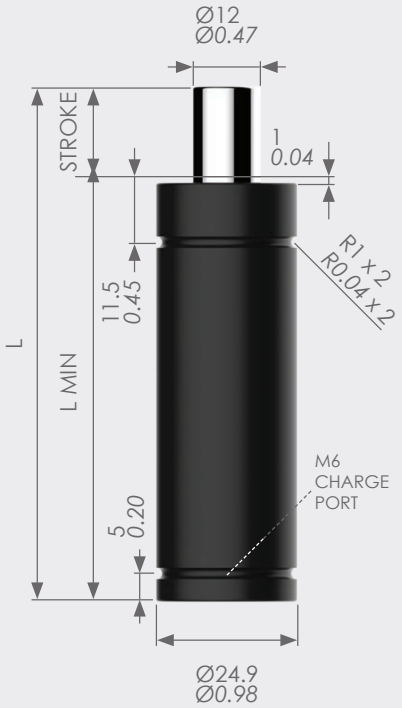

MODEL/STROKE	SPRING FORCE (daN) INITIAL (daN) *(lbs)*	SPRING FORCE (daN) MAXIMUM (daN) *(lbs)*	L MIN (MM) *(in.)*	L (MM) *(in.)*	GAS VOL. (L)	WEIGHT (KG) *(lbs)*
HDG0042-06	**425** *955*	**730** *1641*	**50** *1.97*	**56** *2.20*	**0.003**	**0.14** *0.31*
HDG0042-10		**730** *1641*	**60** *2.36*	**70** *2.76*	**0.005**	**0.17** *0.37*
HDG0042-16		**730** *1641*	**75** *2.95*	**91** *3.58*	**0.008**	**0.20** *0.44*
HDG0042-25		**740** *1664*	**95** *3.74*	**120** *4.72*	**0.011**	**0.22** *0.49*
HDG0042-32		**790** *1776*	**108** *4.25*	**140** *5.51*	**0.021**	**0.24** *0.53*
HDG0042-40		**800** *1798*	**125** *4.92*	**165** *6.50*	**0.026**	**0.27** *0.60*
HDG0042-50		**800** *1798*	**145** *5.71*	**195** *7.68*	**0.032**	**0.31** *0.68*

SPECIAL STROKE SIZES AVAILABLE UPON REQUEST

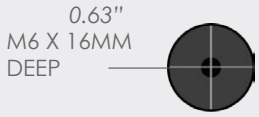

USE ONLY NITROGEN

MAX. PRESSURE:	MIN. PRESSURE:	MAX. PISTON VELOCITY:
150 BAR *2176 PSI*	**25 BAR** *363 PSI*	**0.8M/SEC** *2.62ft/SEC*

SERVICE KIT HDG0042

PED 2014/68/EU

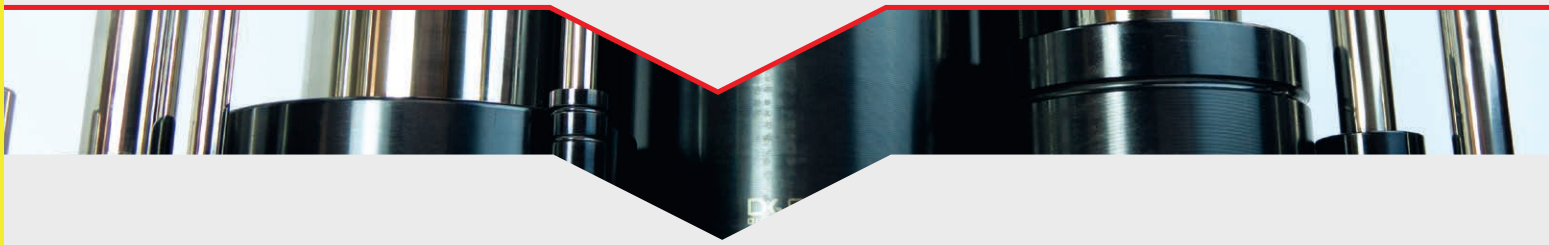

MOUNTING EXAMPLES

(all dimensions are mm, unless otherwise stated) for other possible mounting options see pages 91 - 94

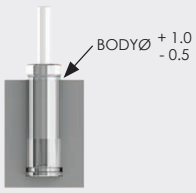

Drop-in Pocket

Front Flange 25 FF

M6 Tapped Hole

Please note: gas springs should always be positively retained where possible. How to order: Spring Type x Stroke + Mounting Type ie: HDG0042 x 06 + FF

500 - 700KG
1102 - 1543LBS

EX0500	PAGE 43
G-EX0500	PAGE 44
ISNG0500	PAGE 45
PLJ0500	PAGE 46
PL0500	PAGE 47
HDG007	PAGE 48

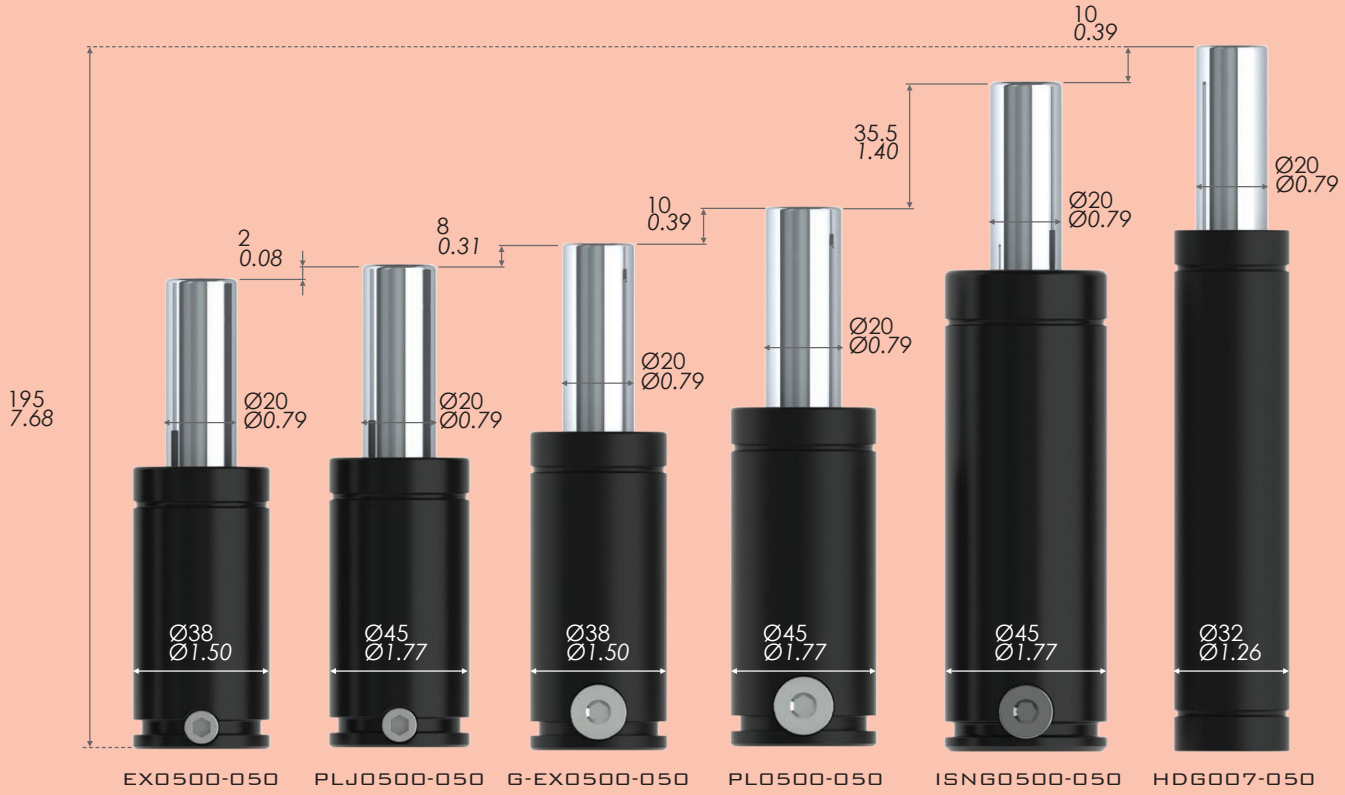

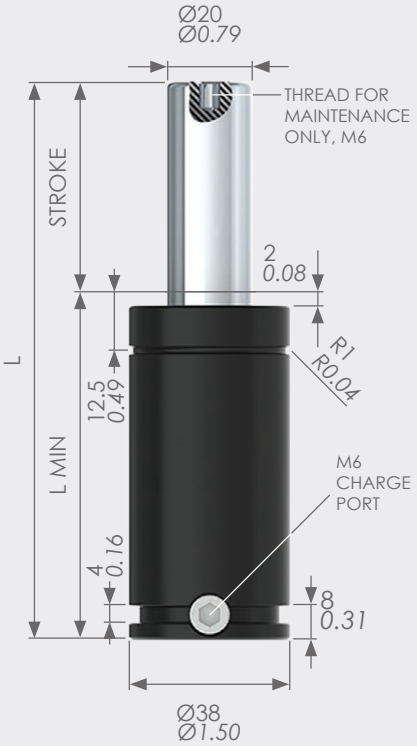

MODEL/STROKE	SPRING FORCE (daN) INITIAL (daN) *(lbs)*	SPRING FORCE (daN) MAXIMUM (daN) *(lbs)*	L MIN (MM) *(in.)*	L (MM) *(in.)*	GAS VOL. (L)	WEIGHT (KG) *(lbs)*
EX0500-010	**470** *1057*	**720** *1619*	**40** *1.57*	**50** *1.97*	**0.01**	**0.26** *0.57*
EX0500-013		**710** *1596*	**43** *1.69*	**56** *2.20*	**0.01**	**0.27** *0.60*
EX0500-016		**720** *1619*	**46** *1.81*	**62** *2.44*	**0.02**	**0.27** *0.60*
EX0500-019		**740** *1664*	**49** *1.93*	**68** *2.68*	**0.02**	**0.30** *0.66*
EX0500-025		**730** *1641*	**55** *2.17*	**80** *3.15*	**0.03**	**0.32** *0.71*
EX0500-032		**720** *1619*	**62** *2.44*	**94** *3.70*	**0.03**	**0.35** *0.77*
EX0500-038		**720** *1619*	**68** *2.68*	**106** *4.17*	**0.04**	**0.37** *0.82*
EX0500-050		**720** *1619*	**80** *3.15*	**130** *5.12*	**0.05**	**0.43** *0.95*
EX0500-063		**720** *1619*	**93** *3.66*	**156** *6.14*	**0.06**	**0.50** *1.10*
EX0500-075		**710** *1596*	**105** *4.13*	**180** *7.09*	**0.07**	**0.54** *1.19*
EX0500-080		**710** *1596*	**110** *4.33*	**190** *7.48*	**0.08**	**0.57** *1.26*
EX0500-100		**710** *1596*	**130** *5.11*	**230** *9.06*	**0.10**	**0.66** *1.46*
EX0500-125		**710** *1596*	**155** *6.10*	**280** *11.02*	**0.12**	**0.77** *1.70*

SPECIAL STROKE SIZES AVAILABLE UPON REQUEST

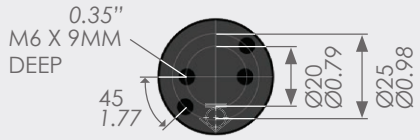

USE ONLY NITROGEN

MAX. PRESSURE:	MIN. PRESSURE:	MAX. PISTON VELOCITY:
150 BAR *2176 PSI*	**20 BAR** *290 PSI*	**1.6M/SEC** *5.25ft/SEC*

SERVICE KIT EX0500

ISO PED 2014/68/EU

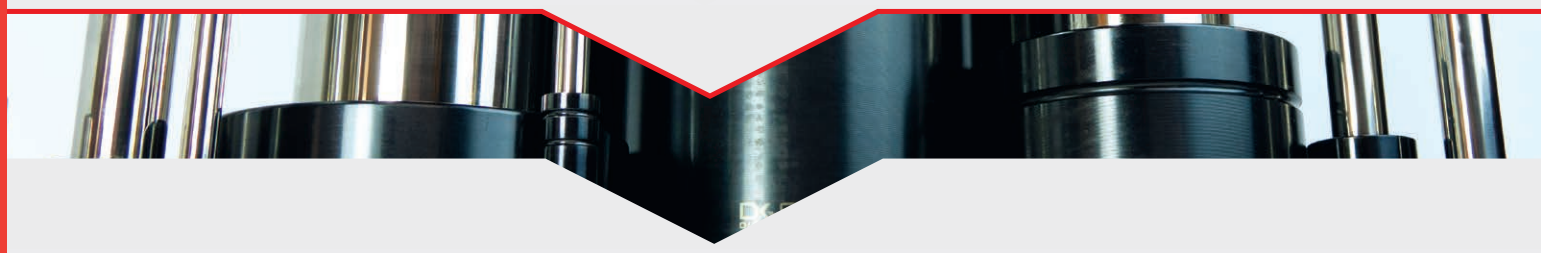

PROTECTION

CODE: SRS-20

MOUNTING EXAMPLES

(all dimensions are mm, unless otherwise stated)
for other possible mounting options see pages 91 - 94

2 X M6 Tapped Holes

Square Front Flange 38 SFF

Front Flange 38 FF

Square Flange 38 SF

End Support 38 ES

Please note: gas springs should always be positively retained where possible. How to order: Spring Type x Stroke + Mounting Type ie: EX0500 X 010 + FF

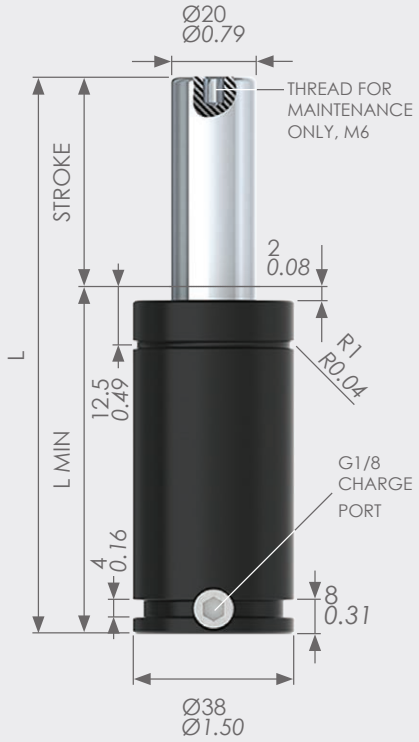

MODEL/STROKE	SPRING FORCE (daN)		L MIN (MM) (in.)	L (MM) (in.)	GAS VOL. (L)	WEIGHT (KG) (lbs)
	INITIAL (daN) (lbs)	MAXIMUM (daN) (lbs)				
G-EX0500-010	470 1057	720 1619	50 1.97	60 2.36	0.01	0.26 0.57
G-EX0500-013		710 1596	53 2.09	66 2.60	0.01	0.27 0.60
G-EX0500-016		720 1619	56 2.20	72 2.83	0.02	0.27 0.60
G-EX0500-019		740 1664	59 2.32	78 3.07	0.02	0.30 0.66
G-EX0500-025		730 1641	65 2.56	90 3.54	0.03	0.32 0.71
G-EX0500-032		720 1619	72 2.83	104 4.09	0.03	0.35 0.77
G-EX0500-038		720 1619	78 3.07	116 4.57	0.04	0.44 0.97
G-EX0500-050		720 1619	90 3.54	140 5.51	0.05	0.51 1.12
G-EX0500-063		720 1619	103 4.06	166 6.54	0.06	0.54 1.19
G-EX0500-075		710 1596	115 4.53	190 7.48	0.07	0.58 1.28
G-EX0500-080		710 1596	120 4.72	200 7.87	0.08	0.60 1.32
G-EX0500-100		710 1596	140 5.51	240 9.45	0.10	0.77 1.70
G-EX0500-125		710 1596	165 6.50	290 11.42	0.12	0.90 1.98

SPECIAL STROKE SIZES AVAILABLE UPON REQUEST

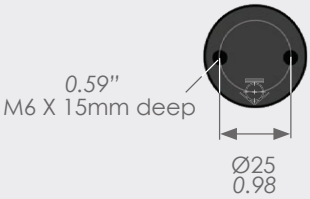

USE ONLY NITROGEN

MAX. PRESSURE:	MIN. PRESSURE:	MAX. PISTON VELOCITY:
150 BAR *2176 PSI*	**20 BAR** *290 PSI*	**1.6M/SEC** *5.25ft/SEC*

SERVICE KIT
G-EX0500

PED
2014/68/EU

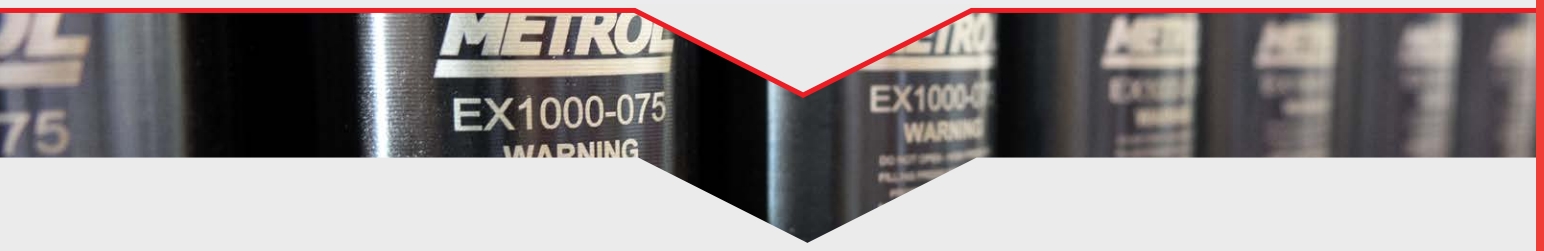

PROTECTION

CODE: SRS-20

MOUNTING EXAMPLES

(all dimensions are mm, unless otherwise stated)
for other possible mounting options see pages 91 - 94

2 X M6 Tapped Holes

Square Front Flange
38 SFF

Front Flange
38 FF

Square Flange
38 SF

End Support
38 ES

Please note: gas springs should always be positively retained where possible. How to order: Spring Type x Stroke + Mounting Type ie: G-EX0500 x 010 + FF

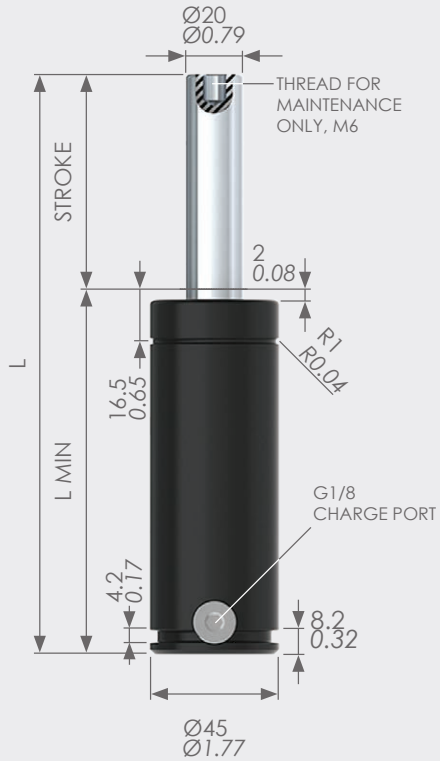

MODEL/STROKE	SPRING FORCE (daN)		L MIN (MM) (in.)	L (MM) (in.)	GAS VOL. (L)	WEIGHT (KG) (lbs)
	INITIAL (daN) (lbs)	MAXIMUM (daN) (lbs)				
ISNG0500-010	**470**	**600**	**95**	**105**	**0.023**	**0.93**
	1057	*1349*	*3.74*	*4.13*	*0.023*	*2.05*
ISNG0500-013		**610**	**97.7**	**110**	**0.025**	**0.95**
		1371	*3.85*	*4.33*	*0.025*	*2.09*
ISNG0500-025		**640**	**110**	**135**	**0.038**	**1.08**
		1439	*4.33*	*5.31*	*0.038*	*2.38*
ISNG0500-038		**650**	**123.1**	**161.2**	**0.051**	**1.19**
		1461	*4.85*	*6.35*	*0.051*	*2.62*
ISNG0500-050		**660**	**135**	**185**	**0.063**	**1.29**
		1484	*5.31*	*7.28*	*0.063*	*2.84*
ISNG0500-063		**660**	**148.5**	**212**	**0.077**	**1.38**
		1484	*5.85*	*8.35*	*0.077*	*3.04*
ISNG0500-080		**670**	**165**	**245**	**0.093**	**1.50**
		1506	*6.50*	*9.65*	*0.093*	*3.31*
ISNG0500-100		**670**	**185**	**285**	**0.114**	**1.70**
		1506	*7.28*	*11.22*	*0.114*	*3.75*
ISNG0500-125		**670**	**210**	**335**	**0.139**	**1.90**
		1506	*8.27*	*13.19*	*0.139*	*4.19*
ISNG0500-160		**670**	**245**	**405**	**0.175**	**2.22**
		1506	*9.65*	*15.94*	*0.175*	*4.89*

SPECIAL STROKE SIZES AVAILABLE UPON REQUEST

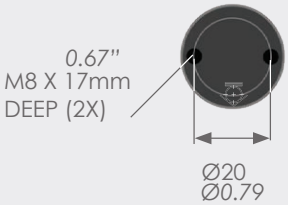

USE ONLY NITROGEN

MAX. PRESSURE:	MIN. PRESSURE:	MAX. PISTON VELOCITY:
150 BAR *2176 PSI*	**20 BAR** *290 PSI*	**1.6M/SEC** *5.25ft/SEC*

SERVICE KIT ISNG0500

ISO PED 2014/68/EU

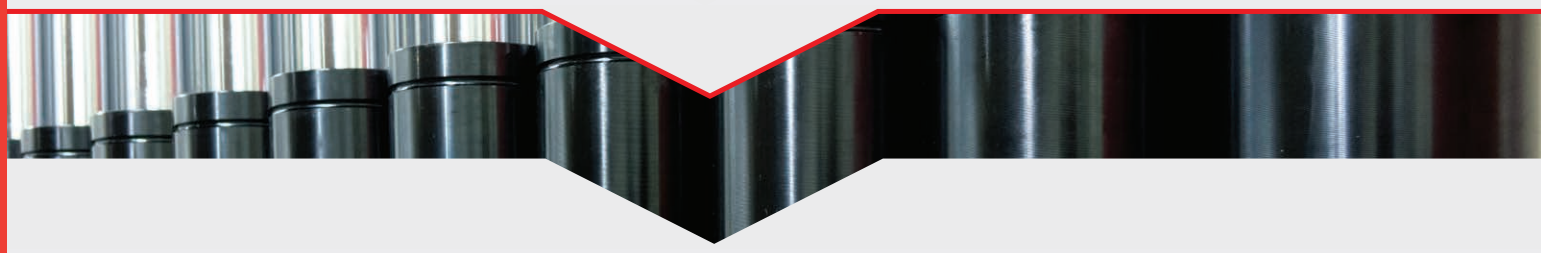

PROTECTION

CODE: SRS-20

MOUNTING EXAMPLES

(all dimensions are mm, unless otherwise stated)
for other possible mounting options see pages 91 - 94

2 X M8 Tapped Holes

Square Front Flange 45 SFF

Front Flange 45 FF

Square Flange 45 SF

Base Plate 45 BP

End Support 45 ES

Please note: gas springs should always be positively retained where possible. How to order: Spring Type x Stroke + Mounting Type ie: ISNG0500 x 010 + FF

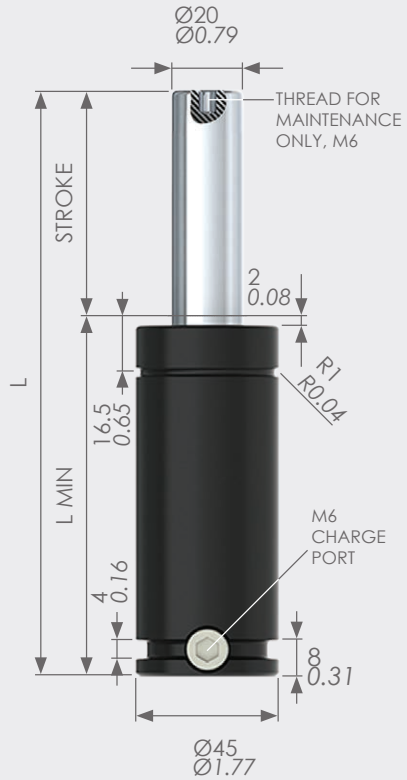

MODEL	FORCE (daN) @20˚ C	
	INITIAL (daN) *(lbs)*	END (daN) *(lbs)*
PLJ0500-20-XXX	**47** / *106*	-
PLJ0500-25-XXX	**58** / *130*	-
PLJ0500-50-XXX	**116** / *261*	-
PLJ0500-75-XXX	**175** / *393*	-
PLJ0500-100-XXX	**233** / *524*	-
PLJ0500-125-XXX	**291** / *654*	-
PLJ0500-150-XXX	**350** / *787*	-

SPECIAL STROKE SIZES AVAILABLE UPON REQUEST

TYPE	STROKE	L MIN	L
PLJ0500	**12.5** *0.49*	**44** *1.73*	**57** *2.24*
	19 *0.75*	**51** *2.01*	**70** *2.76*
	25.3 *1.00*	**57.1** *2.25*	**82.1** *3.23*
	31.5 *1.24*	**62.5** *2.46*	**94.5** *3.72*
	38 *1.50*	**69.5** *2.74*	**107.5** *4.23*
	50 *1.97*	**82** *3.23*	**132** *5.20*
	62.5 *2.46*	**94** *3.70*	**157** *6.18*
	75 *2.95*	**107** *4.21*	**182** *7.17*
	80 *3.15*	**112** *4.41*	**192** *7.56*
	100 *3.94*	**132** *5.20*	**232** *9.13*
	125 *4.92*	**157** *6.18*	**282** *11.10*

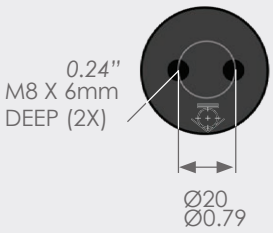

USE ONLY NITROGEN

MAX. PRESSURE:	MIN. PRESSURE:	MAX. PISTON VELOCITY:
150 BAR *2176 PSI*	**20 BAR** *290 PSI*	**1.6M/SEC** *5.25ft/SEC*

SERVICE KIT PLJ0500

PED 2014/68/EU

PROTECTION

CODE: SRS-20-A

MOUNTING EXAMPLES

(all dimensions are mm, unless otherwise stated)
for other possible mounting options see pages 91 - 94

2 X M8 Tapped Holes

Square Front Flange
45 SFF

Front Flange
45 FF

Square Flange
45 SF

End Support
45 ES

Please note: gas springs should always be positively retained where possible. How to order: Spring Type x Stroke + Mounting Type ie: PLJ0500 x 013 + FF

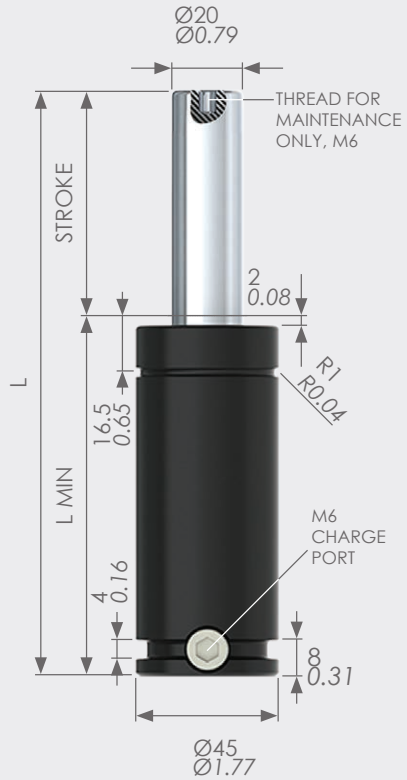

MODEL	FORCE (daN) @20˚ C	
	INITIAL (daN) *(lbs)*	END (daN) *(lbs)*
PL0500-20-XXX	**47** / *106*	-
PL0500-25-XXX	**58** / *130*	-
PL0500-50-XXX	**116** / *261*	-
PL0500-75-XXX	**175** / *393*	-
PL0500-100-XXX	**233** / *524*	-
PL0500-125-XXX	**291** / *654*	-
PL0500-150-XXX	**350** / *787*	-

SPECIAL STROKE SIZES AVAILABLE UPON REQUEST

TYPE	STROKE	L MIN	L
PL0500	**12.5** *0.49*	**62.5** *2.46*	**75.5** *2.97*
	19 *0.75*	**69.5** *2.74*	**88.5** *3.48*
	25 *0.98*	**75.5** *2.97*	**100.5** *3.96*
	37.5 *1.48*	**87.5** *3.44*	**125.5** *4.94*
	50 *1.97*	**100.5** *3.96*	**150.5** *5.93*
	62.5 *2.46*	**112.5** *4.43*	**175.5** *6.91*
	75 *2.95*	**125.5** *4.94*	**200.5** *7.89*
	80 *3.15*	**130.5** *5.14*	**210.5** *8.29*
	100 *3.94*	**150.5** *5.93*	**250.5** *9.86*
	125 *4.92*	**175.5** *6.91*	**300.5** *11.83*

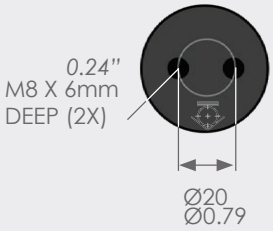

USE ONLY NITROGEN

MAX. PRESSURE:	MIN. PRESSURE:	MAX. PISTON VELOCITY:
150 BAR *2176 PSI*	**20 BAR** *290 PSI*	**1.6M/SEC** *5.25ft/SEC*

SERVICE KIT PL0500

PED 2014/68/EU

PROTECTION

CODE: SRS-20-A

MOUNTING EXAMPLES

(all dimensions are mm, unless otherwise stated)
for other possible mounting options see pages 91 - 94

2 X M8 Tapped Holes

Square Front Flange 45 SFF

Front Flange 45 FF

Square Flange 45 SF

End Support 45 ES

Please note: gas springs should always be positively retained where possible. How to order: Spring Type x Stroke + Mounting Type ie: PL0500 x 013 + FF

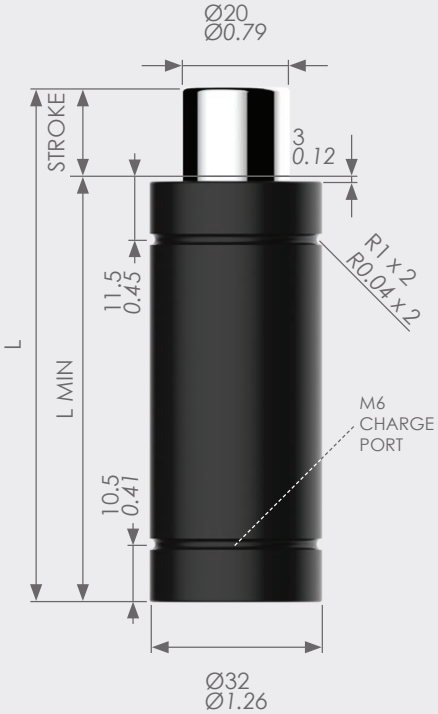

MODEL/STROKE	SPRING FORCE (daN)		L MIN (MM) *(in.)*	L (MM) *(in.)*	GAS VOL. (L)	WEIGHT (KG) *(lbs)*
	INITIAL (daN) *(lbs)*	MAXIMUM (daN) *(lbs)*				
HDG007-06	**740** *1664*	**1000** *2248*	**57** *2.24*	**63** *2.48*	**0.012**	**0.20** *0.44*
HDG007-10		**1000** *2248*	**65** *2.56*	**75** *2.95*	**0.017**	**0.25** *0.55*
HDG007-16		**1100** *2473*	**77** *3.03*	**93** *3.66*	**0.024**	**0.32** *0.71*
HDG007-25		**1200** *2698*	**95** *3.74*	**120** *4.72*	**0.034**	**0.33** *0.73*
HDG007-32		**1200** *2698*	**108** *4.25*	**140** *5.51*	**0.042**	**0.37** *0.82*
HDG007-40		**1200** *2698*	**125** *4.92*	**165** *6.50*	**0.052**	**0.42** *0.93*
HDG007-50		**1200** *2698*	**145** *5.71*	**195** *7.68*	**0.063**	**0.48** *1.06*

SPECIAL STROKE SIZES AVAILABLE UPON REQUEST

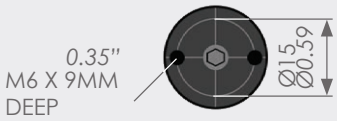

USE ONLY NITROGEN

MAX. PRESSURE:	MIN. PRESSURE:	MAX. PISTON VELOCITY:
150 BAR *2176 PSI*	**25 BAR** *363 PSI*	**0.8M/SEC** *2.62ft/SEC*

SERVICE KIT HDG007

PED 2014/68/EU

MOUNTING EXAMPLES

(all dimensions are mm, unless otherwise stated) for other possible mounting options see pages 91 - 94

2 X M6 Tapped Holes

Square Front Flange
32 SFF

Front Flange
32 FF

Please note: gas springs should always be positively retained where possible. How to order: Spring Type x Stroke + Mounting Type ie: HDG007 x 06 + FF

750 - 1000KG
1653 - 2205LBS

EX0750	PAGE 50	EX1000	PAGE 55
G-EX0750	PAGE 51	G-EX1000	PAGE 56
ISNG0750	PAGE 52	T-EX1000	PAGE 57
PLJ0750	PAGE 53	MX1000	PAGE 58
PL0750	PAGE 54	HDG010	PAGE 59

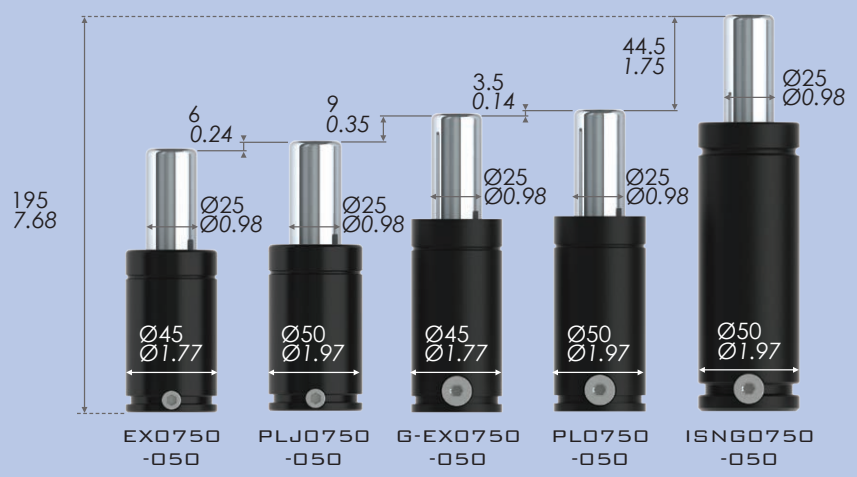

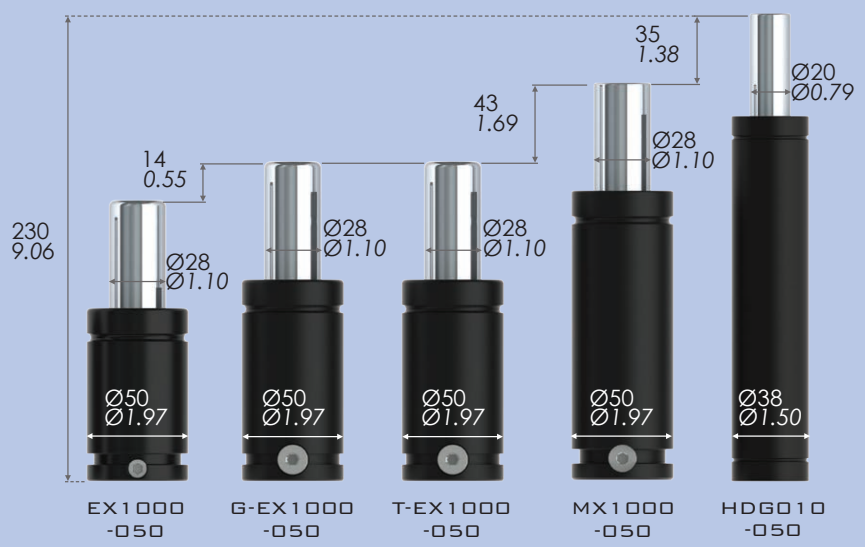

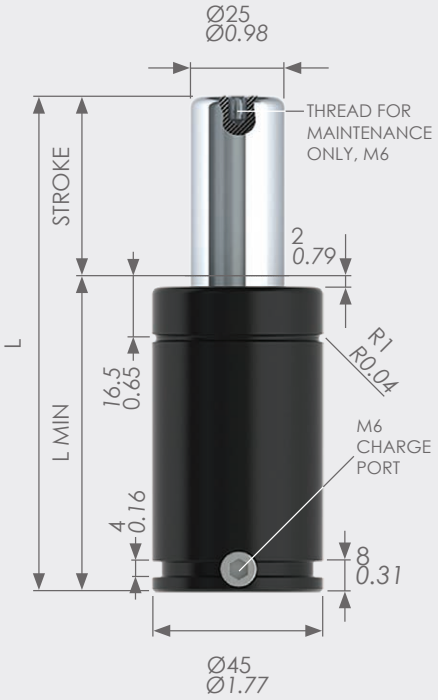

MODEL/STROKE	SPRING FORCE (daN)		L MIN (MM) (in.)	L (MM) (in.)	GAS VOL. (L)	WEIGHT (KG) (lbs)
	INITIAL (daN) (lbs)	MAXIMUM (daN) (lbs)				
EX0750-010	**740** 1664	**1210** 2720	**42** 1.65	**52** 2.05	**0.02**	**0.37** 0.82
EX0750-013		**1210** 2720	**45** 1.77	**58** 2.28	**0.02**	**0.40** 0.88
EX0750-016		**1210** 2720	**48** 1.89	**64** 2.52	**0.03**	**0.42** 0.93
EX0750-019		**1170** 2630	**51** 2.01	**70** 2.76	**0.03**	**0.45** 0.99
EX0750-025		**1180** 2653	**57** 2.24	**82** 3.23	**0.04**	**0.48** 1.06
EX0750-032		**1180** 2653	**64** 2.52	**96** 3.78	**0.05**	**0.54** 1.19
EX0750-038		**1180** 2653	**70** 2.76	**108** 4.25	**0.05**	**0.57** 1.26
EX0750-050		**1180** 2653	**82** 3.23	**132** 5.20	**0.07**	**0.66** 1.46
EX0750-063		**1180** 2653	**95** 3.74	**158** 6.22	**0.09**	**0.73** 1.61
EX0750-075		**1190** 2675	**107** 4.21	**182** 7.17	**0.10**	**0.77** 1.70
EX0750-080		**1190** 2675	**112** 4.41	**192** 7.56	**0.11**	**0.84** 1.85
EX0750-100		**1190** 2675	**132** 5.20	**232** 9.13	**0.13**	**0.94** 2.07
EX0750-125		**1190** 2675	**157** 6.18	**282** 11.10	**0.17**	**1.10** 2.43

SPECIAL STROKE SIZES AVAILABLE UPON REQUEST

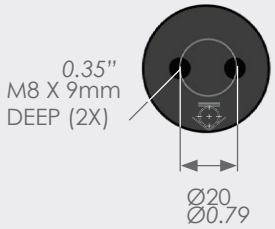

USE ONLY NITROGEN

MAX. PRESSURE: **150 BAR** *2176 PSI*

MIN. PRESSURE: **20 BAR** *290 PSI*

MAX. PISTON VELOCITY: **1.6M/SEC** *5.25ft/SEC*

SERVICE KIT EX0750

ISO

PED 2014/68/EU

PROTECTION

CODE: SRS-25

MOUNTING EXAMPLES

(all dimensions are mm, unless otherwise stated)
for other possible mounting options see pages 91 - 94

2 X M8 Tapped Holes

Square Front Flange 45 SFF

Front Flange 45 FF

Square Flange 45 SF

Base Plate 45 BP

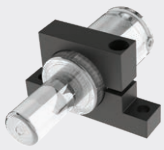

End Support 45 ES

Please note: gas springs should always be positively retained where possible. How to order: Spring Type x Stroke + Mounting Type ie: EX0750 x 010 + FF

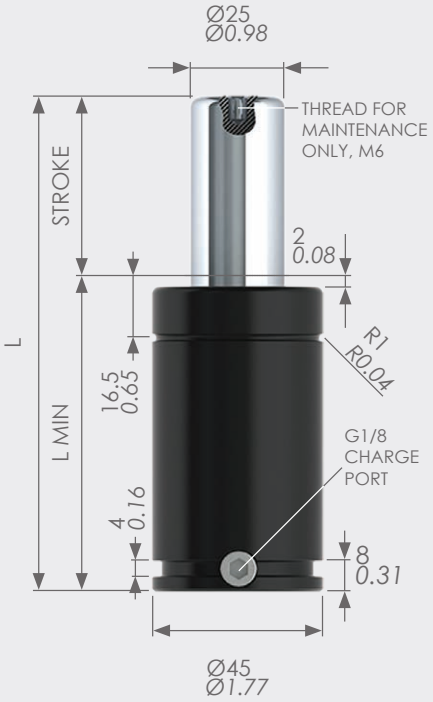

MODEL/STROKE	SPRING FORCE (daN)		L MIN (MM) (in.)	L (MM) (in.)	GAS VOL. (L)	WEIGHT (KG) (lbs)
	INITIAL (daN) (lbs)	MAXIMUM (daN) (lbs)				
G-EX0750-010	**740**	**1210**	**57**	**67**	**0.02**	**0.37**
	1664	*2720*	*2.24*	*2.64*		*0.82*
G-EX0750-013		**1210**	**60**	**73**	**0.02**	**0.39**
		2720	*2.36*	*2.87*		*0.86*
G-EX0750-016		**1210**	**63**	**79**	**0.03**	**0.41**
		2720	*2.48*	*3.11*		*0.90*
G-EX0750-019		**1170**	**66**	**85**	**0.03**	**0.41**
		2630	*2.60*	*3.35*		*0.90*
G-EX0750-025		**1180**	**72**	**97**	**0.04**	**0.48**
		2653	*2.83*	*3.82*		*1.06*
G-EX0750-032		**1180**	**79**	**111**	**0.05**	**0.55**
		2653	*3.11*	*4.37*		*1.21*
G-EX0750-038		**1180**	**85**	**123**	**0.05**	**0.59**
		2653	*3.35*	*4.84*		*1.30*
G-EX0750-050		**1180**	**97**	**147**	**0.07**	**0.65**
		2653	*3.81*	*5.79*		*1.43*
G-EX0750-063		**1180**	**110**	**173**	**0.09**	**0.72**
		2653	*4.33*	*6.81*		*1.59*
G-EX0750-075		**1190**	**122**	**197**	**0.10**	**1.00**
		2675	*4.80*	*7.76*		*2.20*
G-EX0750-080		**1190**	**127**	**207**	**0.11**	**1.08**
		2675	*5.00*	*8.15*		*2.38*
G-EX0750-100		**1190**	**147**	**247**	**0.13**	**1.16**
		2675	*5.79*	*9.72*		*2.56*
G-EX0750-125		**1190**	**172**	**297**	**0.17**	**1.18**
		2675	*6.77*	*11.69*		*2.60*

SPECIAL STROKE SIZES AVAILABLE UPON REQUEST

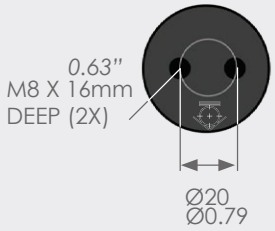

USE ONLY NITROGEN

MAX. PRESSURE:	MIN. PRESSURE:	MAX. PISTON VELOCITY:
150 BAR *2176 PSI*	**20 BAR** *290 PSI*	**1.6M/SEC** *5.25ft/SEC*

SERVICE KIT G-EX0750

PED 2014/68/EU

PROTECTION

CODE: SRS-25

MOUNTING EXAMPLES

(all dimensions are mm, unless otherwise stated)
for other possible mounting options see pages 91 - 94

2 X M8 Tapped Holes

Square Front Flange 45 SFF

Front Flange 45 FF

Square Flange 45 SF

Base Plate 45 BP

End Support 45 ES

Please note: gas springs should always be positively retained where possible. How to order: Spring Type x Stroke + Mounting Type ie: G-EX0750 x 010 + FF

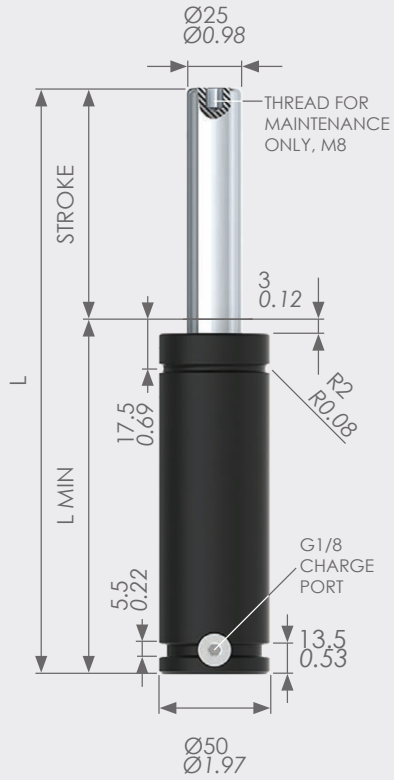

MODEL/STROKE	SPRING FORCE (daN)		L MIN (MM) (in.)	L (MM) (in.)	GAS VOL. (L)	WEIGHT (KG) (lbs)
	INITIAL (daN) (lbs)	MAXIMUM (daN) (lbs)				
ISNG0750-013	**740** 1664	**1200** 2698	**107.7** 4.24	**120.4** 4.74	**0.03**	**1.33** 2.93
ISNG0750-025		**1200** 2698	**120** 4.72	**145** 5.71	**0.04**	**1.40** 3.09
ISNG0750-038		**1200** 2698	**133.1** 5.24	**171.2** 6.74	**0.06**	**1.57** 3.46
ISNG0750-050		**1200** 2698	**145** 5.71	**195** 7.68	**0.07**	**1.67** 3.68
ISNG0750-063		**1200** 2698	**158.5** 6.24	**222** 8.74	**0.09**	**1.80** 3.97
ISNG0750-080		**1200** 2698	**175** 6.89	**255** 10.04	**0.11**	**1.94** 4.28
ISNG0750-100		**1200** 2698	**195** 7.68	**295** 11.61	**0.14**	**2.11** 4.65
ISNG0750-125		**1210** 2720	**220** 8.66	**345** 13.58	**0.17**	**2.37** 5.22
ISNG0750-160		**1210** 2720	**255** 10.04	**415** 16.34	**0.21**	**2.69** 5.93
ISNG0750-200		**1210** 2720	**295** 11.61	**495** 19.49	**0.26**	**3.07** 6.77
ISNG0750-250		**1210** 2720	**345** 13.58	**595** 23.43	**0.33**	**3.55** 7.83
ISNG0750-300		**1210** 2720	**395** 15.55	**695** 27.36	**0.39**	**3.98** 8.77

SPECIAL STROKE SIZES AVAILABLE UPON REQUEST

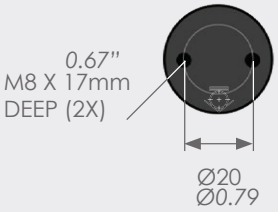

USE ONLY NITROGEN

MAX. PRESSURE:	MIN. PRESSURE:	MAX. PISTON VELOCITY:
150 BAR 2176 PSI	**20 BAR** 290 PSI	**1.6M/SEC** 5.25ft/SEC

SERVICE KIT ISNG0750

ISO PED 2014/68/EU

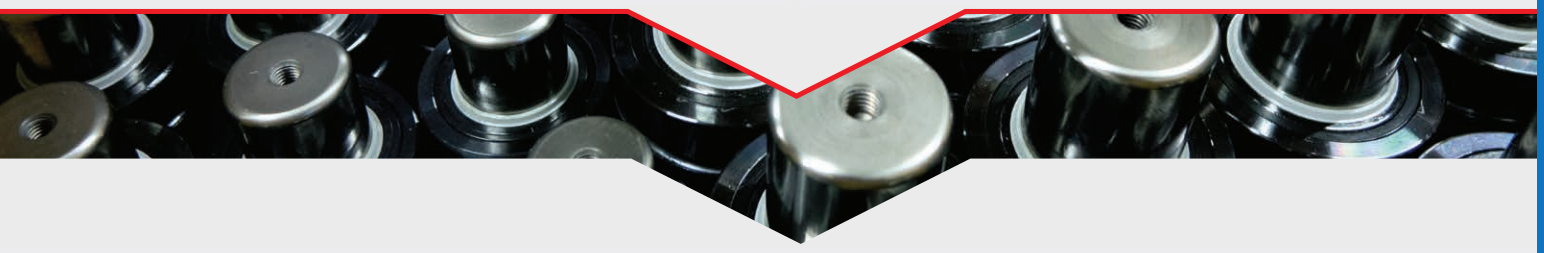

PROTECTION

CODE: SRS-25-A

MOUNTING EXAMPLES

(all dimensions are mm, unless otherwise stated)
for other possible mounting options see pages 91 - 94

2 X M8 Tapped Holes

Square Front Flange 50 SFF

Front Flange 50 FF

Square Flange 50 SF

Base Plate 50 BP

End Support 50 ES / 50 HM

Please note: gas springs should always be positively retained where possible. How to order: Spring Type x Stroke + Mounting Type ie: ISNG0750 x 12.7 + FF

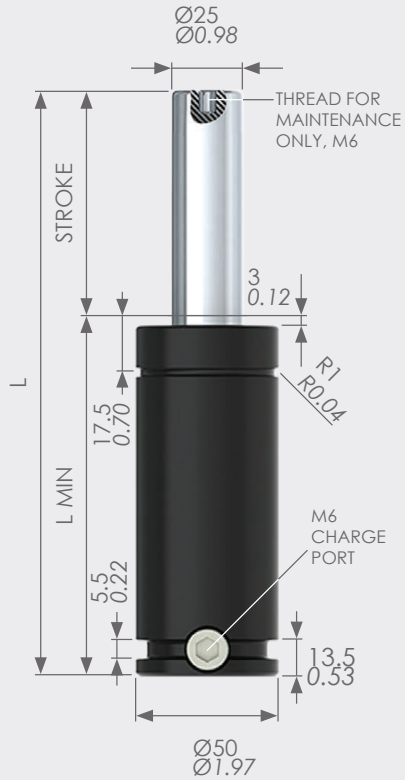

MODEL	FORCE (daN) @20˚ C	
	INITIAL (daN) *(lbs)*	END (daN) *(lbs)*
PLJ0750-20-XXX	**47** / *106*	-
PLJ0750-25-XXX	**58** / *130*	-
PLJ0750-50-XXX	**116** / *261*	-
PLJ0750-75-XXX	**175** / *393*	-
PLJ0750-100-XXX	**233** / *524*	-
PLJ0750-125-XXX	**291** / *654*	-
PLJ0750-150-XXX	**350** / *787*	-

SPECIAL STROKE SIZES AVAILABLE UPON REQUEST

TYPE	STROKE	L MIN	L
PLJ0750	**12.5** *0.49*	**50** *1.97*	**63** *2.48*
	18.8 *0.74*	**56.6** *2.23*	**75.6** *2.98*
	25 *0.98*	**63** *2.48*	**88** *3.46*
	31.5 *1.24*	**69** *2.72*	**101** *3.98*
	37.5 *1.48*	**75** *2.95*	**113** *4.45*
	50 *1.97*	**88** *3.46*	**138** *5.43*
	62.5 *2.46*	**100** *3.94*	**163** *6.42*
	75 *2.95*	**113** *4.45*	**188** *7.40*
	80 *3.15*	**118** *4.65*	**198** *7.80*
	100 *3.94*	**138** *5.43*	**238** *9.37*
	125 *4.92*	**163** *6.42*	**288** *11.34*

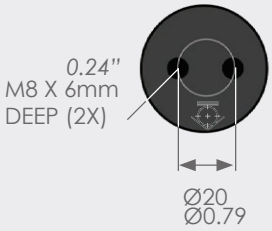

USE ONLY NITROGEN

MAX. PRESSURE:	MIN. PRESSURE:	MAX. PISTON VELOCITY:
150 BAR *2176 PSI*	**20 BAR** *290 PSI*	**1.6M/SEC** *5.25ft/SEC*

SERVICE KIT PLJ0750

PED 2014/68/EU

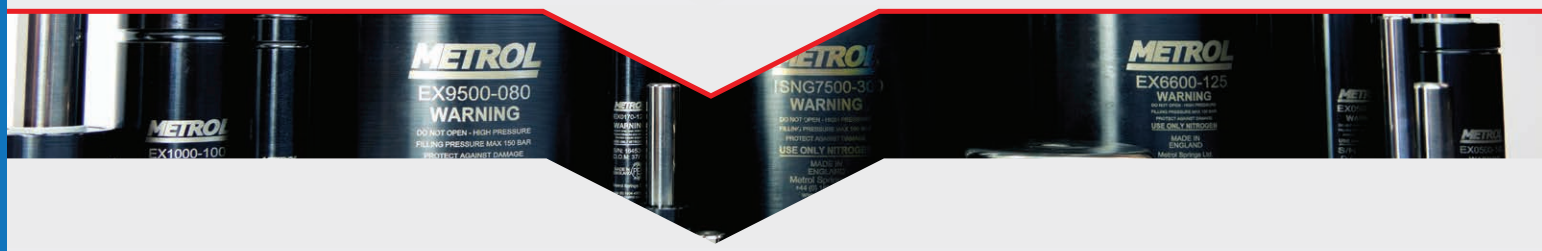

PROTECTION

CODE: SRS-25-A

MOUNTING EXAMPLES

(all dimensions are mm, unless otherwise stated)
for other possible mounting options see pages 91 - 94

2 X M8 Tapped Holes

Square Front Flange 50 SFF

Front Flange 50 FF

Square Flange 50 SF

End Support 50 ES

Please note: gas springs should always be positively retained where possible. How to order: Spring Type x Stroke + Mounting Type ie: PLJ0750 x 013 + FF

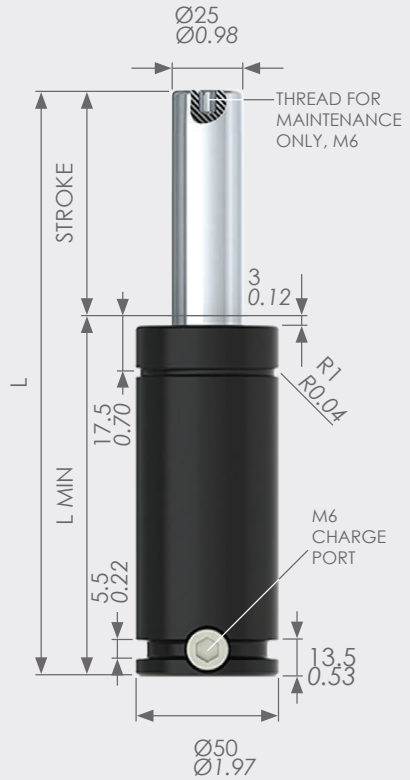

MODEL	FORCE (daN) @20˚ C	
	INITIAL (daN) *(lbs)*	END (daN) *(lbs)*
PL0750-20-XXX	**47** / *106*	-
PL0750-25-XXX	**58** / *130*	-
PL0750-50-XXX	**116** / *261*	-
PL0750-75-XXX	**175** / *393*	-
PL0750-100-XXX	**233** / *524*	-
PL0750-125-XXX	**291** / *654*	-
PL0750-150-XXX	**350** / *787*	-

SPECIAL STROKE SIZES AVAILABLE UPON REQUEST

TYPE	STROKE	L MIN	L
PL0750	**12.5** *0.49*	**62.5** *2.46*	**75.5** *2.97*
	19 *0.75*	**69.5** *2.74*	**88.5** *3.48*
	25 *0.98*	**75.5** *2.97*	**100.5** *3.96*
	37.5 *1.48*	**87.5** *3.44*	**125.5** *4.94*
	50 *1.97*	**100.5** *3.96*	**150.5** *5.93*
	62.5 *2.46*	**112.5** *4.43*	**175.5** *6.91*
	75 *2.95*	**125.5** *4.94*	**200.5** *7.89*
	80 *3.15*	**130.5** *5.15*	**210.5** *8.29*
	100 *3.94*	**150.5** *5.93*	**250.5** *9.86*
	125 *4.92*	**175.5** *6.91*	**300.5** *11.83*

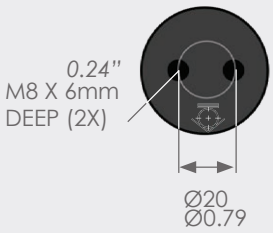

USE ONLY NITROGEN

MAX. PRESSURE:	MIN. PRESSURE:	MAX. PISTON VELOCITY:
150 BAR *2176 PSI*	**20 BAR** *290 PSI*	**1.6M/SEC** *5.25ft/SEC*

SERVICE KIT PLJ0750

PED 2014/68/EU

PROTECTION

CODE: SRS-25-A

MOUNTING EXAMPLES

(all dimensions are mm, unless otherwise stated)
for other possible mounting options see pages 91 - 94

2 X M8 Tapped Holes

Square Front Flange 50 SFF

Front Flange 50 FF

Square Flange 50 SF

End Support 50 ES

Please note: gas springs should always be positively retained where possible. How to order: Spring Type x Stroke + Mounting Type ie: PL0750 x 013 + FF

MODEL/STROKE	SPRING FORCE (daN)		L MIN (MM) (in.)	L (MM) (in.)	GAS VOL. (L)	WEIGHT (KG) (lbs)
	INITIAL (daN) (lbs)	MAXIMUM (daN) (lbs)				
EX1000-013	**920** 2068	**1380** 3102	**51** 2.01	**64** 2.52	**0.03**	**0.51** 1.12
EX1000-016		**1380** 3102	**54** 2.13	**70** 2.76	**0.04**	**0.53** 1.17
EX1000-019		**1400** 3147	**57** 2.24	**76** 2.99	**0.04**	**0.56** 1.23
EX1000-025		**1420** 3192	**63** 2.48	**88** 3.46	**0.05**	**0.59** 1.30
EX1000-032		**1430** 3215	**70** 2.76	**102** 4.02	**0.06**	**0.64** 1.41
EX1000-038		**1450** 3260	**76** 2.99	**114** 4.49	**0.07**	**0.75** 1.65
EX1000-050		**1460** 3282	**88** 3.46	**138** 5.43	**0.09**	**0.85** 1.87
EX1000-063		**1470** 3305	**101** 3.98	**164** 6.46	**0.11**	**0.96** 2.12
EX1000-075		**1470** 3305	**113** 4.45	**188** 7.40	**0.13**	**1.08** 2.38
EX1000-080		**1480** 3327	**118** 4.65	**198** 7.80	**0.14**	**1.10** 2.43
EX1000-100		**1480** 3327	**138** 5.43	**238** 9.37	**0.17**	**1.28** 2.82
EX1000-125		**1480** 3327	**163** 6.42	**288** 11.34	**0.21**	**1.39** 3.06

SPECIAL STROKE SIZES AVAILABLE UPON REQUEST

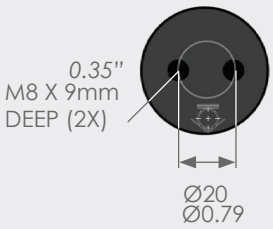

USE ONLY NITROGEN

MAX. PRESSURE:	MIN. PRESSURE:	MAX. PISTON VELOCITY:
150 BAR 2176 PSI	**20 BAR** 290 PSI	**1.6M/SEC** 5.25ft/SEC

SERVICE KIT EX1000

ISO PED 2014/68/EU

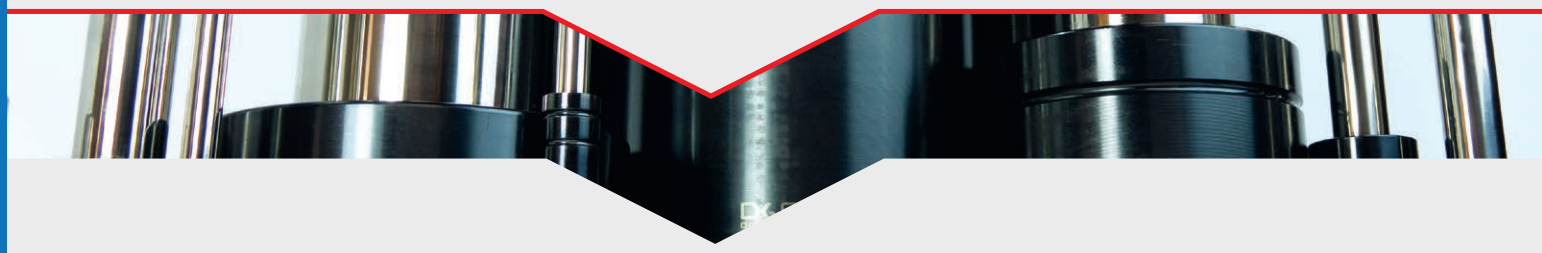

PROTECTION

CODE: SRS-28

MOUNTING EXAMPLES

(all dimensions are mm, unless otherwise stated)
for other possible mounting options see pages 91 - 94

2 X M6 Tapped Holes

Square Front Flange 50 SFF

Front Flange 50 FF

Square Flange 50 SF

Base Plate 50 BP

End Support 50 ES / 50 HM

Please note: gas springs should always be positively retained where possible. How to order: Spring Type x Stroke + Mounting Type ie: EX1000 x 013 + FF

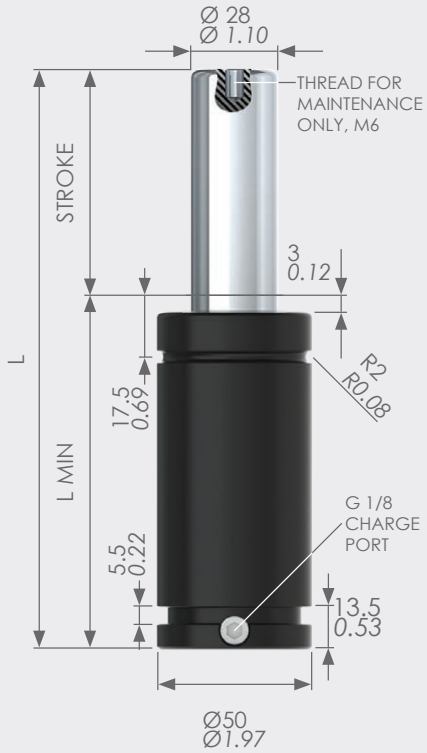

MODEL/STROKE	SPRING FORCE (daN)		L MIN (MM) (in.)	L (MM) (in.)	GAS VOL. (L)	WEIGHT (KG) (lbs)
	INITIAL (daN) (lbs)	MAXIMUM (daN) (lbs)				
G-EX1000-013	**920**	**1380**	**65**	**78**	**0.03**	**0.50**
	2068	*3102*	*2.56*	*3.07*		*1.10*
G-EX1000-016		**1380**	**68**	**84**	**0.04**	**0.52**
		3102	*2.68*	*3.31*		*1.15*
G-EX1000-019		**1400**	**71**	**90**	**0.04**	**0.54**
		3147	*2.80*	*3.54*		*1.19*
G-EX1000-025		**1420**	**77**	**102**	**0.05**	**0.59**
		3192	*3.03*	*4.02*		*1.30*
G-EX1000-032		**1430**	**84**	**116**	**0.06**	**0.70**
		3215	*3.31*	*4.57*		*1.54*
G-EX1000-038		**1450**	**90**	**128**	**0.07**	**0.75**
		3260	*3.54*	*5.04*		*1.65*
G-EX1000-050		**1460**	**102**	**152**	**0.09**	**0.90**
		3282	*4.02*	*5.98*		*1.98*
G-EX1000-063		**1470**	**115**	**178**	**0.11**	**0.90**
		3305	*4.53*	*7.01*		*1.98*
G-EX1000-075		**1470**	**127**	**202**	**0.13**	**1.07**
		3305	*5.00*	*7.95*		*2.36*
G-EX1000-080		**1480**	**132**	**212**	**0.14**	**1.10**
		3327	*5.20*	*8.35*		*2.43*
G-EX1000-100		**1480**	**152**	**252**	**0.17**	**1.34**
		3327	*5.98*	*9.92*		*2.95*
G-EX1000-125		**1480**	**177**	**302**	**0.21**	**1.39**
		3327	*6.97*	*11.89*		*3.06*

SPECIAL STROKE SIZES AVAILABLE UPON REQUEST

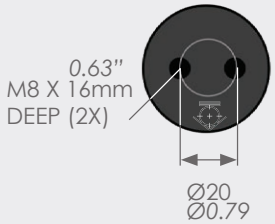

USE ONLY NITROGEN

MAX. PRESSURE:	MIN. PRESSURE:	MAX. PISTON VELOCITY:
150 BAR *2176 PSI*	**20 BAR** *290 PSI*	**1.6M/SEC** *5.25ft/SEC*

SERVICE KIT G-EX1000

PED 2014/68/EU

PROTECTION

CODE: SRS-28

MOUNTING EXAMPLES

(all dimensions are mm, unless otherwise stated)
for other possible mounting options see pages 91 - 94

2 X M8 Tapped Holes

Square Front Flange 50 SFF

Front Flange 50 FF

Square Flange 50 SF

Base Plate 50 BP

End Support 50 ES / 50 HM

Please note: gas springs should always be positively retained where possible. How to order: Spring Type x Stroke + Mounting Type ie: G-EX1000 x 013 + FF

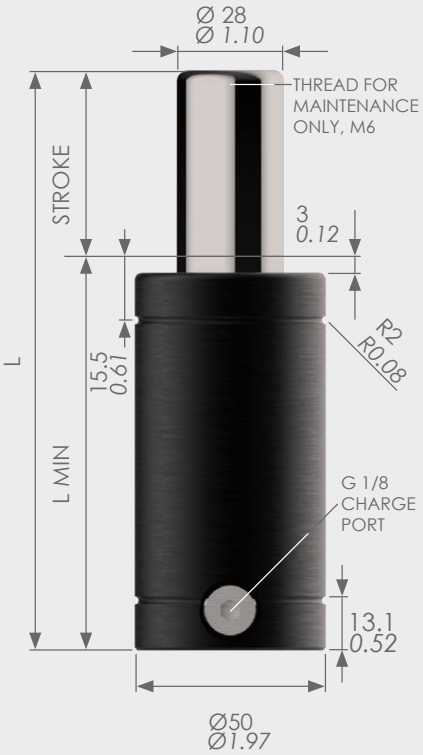

MODEL/STROKE	SPRING FORCE (daN)		L MIN (MM) *(in.)*	L (MM) *(in.)*	GAS VOL. (L)	WEIGHT (KG) *(lbs)*
	INITIAL (daN) *(lbs)*	MAXIMUM (daN) *(lbs)*				
T-EX1000-013	**920** *2068*	**1380** *3102*	**65** *2.56*	**78** *3.07*	**0.03**	**0.50** *1.10*
T-EX1000-016		**1380** *3102*	**68** *2.68*	**84** *3.31*	**0.04**	**0.52** *1.15*
T-EX1000-019		**1400** *3147*	**71** *2.80*	**90** *3.54*	**0.04**	**0.54** *1.19*
T-EX1000-025		**1420** *3192*	**77** *3.03*	**102** *4.02*	**0.05**	**0.59** *1.30*
T-EX1000-032		**1430** *3215*	**84** *3.31*	**116** *4.57*	**0.06**	**0.70** *1.54*
T-EX1000-038		**1450** *3260*	**90** *3.54*	**128** *5.04*	**0.07**	**0.75** *1.65*
T-EX1000-050		**1460** *3282*	**102** *4.02*	**152** *5.98*	**0.09**	**0.90** *1.98*
T-EX1000-063		**1470** *3305*	**115** *4.53*	**178** *7.01*	**0.11**	**0.90** *1.98*
T-EX1000-075		**1470** *3305*	**127** *5.00*	**202** *7.95*	**0.13**	**1.07** *2.36*
T-EX1000-080		**1480** *3327*	**132** *5.20*	**212** *8.35*	**0.14**	**1.10** *2.43*
T-EX1000-100		**1480** *3327*	**152** *5.98*	**252** *9.92*	**0.17**	**1.34** *2.95*
T-EX1000-125		**1480** *3327*	**177** *6.97*	**302** *11.89*	**0.21**	**1.39** *3.06*

SPECIAL STROKE SIZES AVAILABLE UPON REQUEST

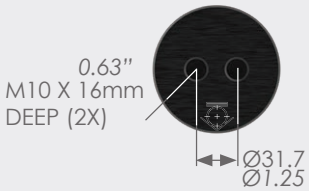

USE ONLY NITROGEN

MAX. PRESSURE:	MIN. PRESSURE:	MAX. PISTON VELOCITY:
150 BAR *2176 PSI*	**20 BAR** *290 PSI*	**1.6M/SEC** *5.25ft/SEC*

SERVICE KIT T-EX1000

PED 2014/68/EU

PROTECTION

CODE: SRS-28

MOUNTING EXAMPLES

(all dimensions are mm, unless otherwise stated)
for other possible mounting options see pages 91 - 94

2 X M8 Tapped Holes

Square Front Flange 50 SFF

Front Flange 50 FF

Lower Square Flange 50 LSF

End Support 50 ES / 50 HM

Please note: gas springs should always be positively retained where possible. How to order: Spring Type x Stroke + Mounting Type ie: T-EX1000 x 013 + FF

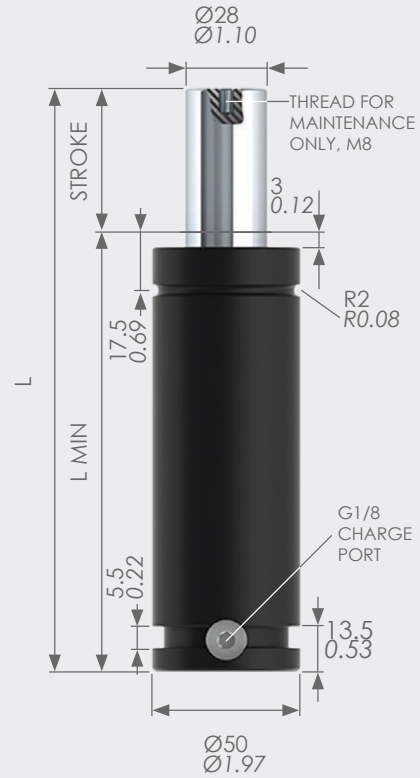

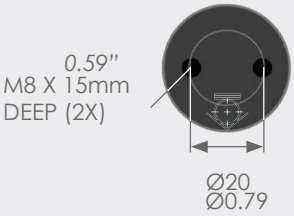

MODEL/STROKE	SPRING FORCE (daN)		L MIN (MM) (in.)	L (MM) (in.)	GAS VOL. (L)	WEIGHT (KG) (lbs)
	INITIAL (daN) (lbs)	MAXIMUM (daN) (lbs)				
MX1000-013	**920**	**1120**	**108**	**121**	**0.06**	**1.25**
	2068	*2518*	*4.25*	*4.76*		*2.75*
MX1000-025		**1210**	**120**	**145**	**0.07**	**1.38**
		2720	*4.72*	*5.71*		*3.04*
MX1000-038		**1280**	**133**	**171**	**0.09**	**1.50**
		2878	*5.24*	*6.73*		*3.31*
MX1000-050		**1320**	**145**	**195**	**0.11**	**1.60**
		2967	*5.71*	*7.68*		*3.53*
MX1000-063		**1350**	**158**	**221**	**0.13**	**1.64**
		3035	*6.22*	*8.70*		*3.62*
MX1000-075		**1370**	**170**	**245**	**0.15**	**1.88**
		3080	*6.69*	*9.65*		*4.14*
MX1000-080		**1380**	**175**	**255**	**0.16**	**2.01**
		3102	*6.89*	*10.04*		*4.43*
MX1000-100		**1410**	**195**	**295**	**0.19**	**2.14**
		3170	*7.68*	*11.61*		*4.72*
MX1000-125		**1430**	**220**	**345**	**0.23**	**2.40**
		3215	*8.66*	*13.58*		*5.29*
MX1000-150		**1450**	**245**	**395**	**0.27**	**2.55**
		3260	*9.65*	*15.55*		*5.62*
MX1000-160		**1450**	**255**	**415**	**0.28**	**2.76**
		3260	*10.04*	*16.34*		*6.08*
MX1000-175		**1460**	**270**	**445**	**0.30**	**2.90**
		3282	*10.63*	*17.52*		*6.39*
MX1000-200		**1470**	**295**	**495**	**0.34**	**3.15**
		3305	*11.61*	*19.49*		*6.94*
MX1000-250		**1480**	**345**	**595**	**0.42**	**3.35**
		3327	*13.58*	*23.43*		*7.39*
MX1000-300		**1490**	**395**	**695**	**0.49**	**3.58**
		3350	*15.55*	*27.36*		*7.89*

SPECIAL STROKE SIZES AVAILABLE UPON REQUEST

USE ONLY NITROGEN

MAX. PRESSURE:	MIN. PRESSURE:	MAX. PISTON VELOCITY:
150 BAR *2176 PSI*	**20 BAR** *290 PSI*	**1.6M/SEC** *5.25ft/SEC*

SERVICE KIT MX1000

ISO PED 2014/68/EU

PROTECTION

CODE: SRS-28

MOUNTING EXAMPLES

(all dimensions are mm, unless otherwise stated)
for other possible mounting options see pages 91 - 94

2 X M8 Tapped Holes

Square Front Flange 50 SFF

Front Flange 50 FF

Square Flange 50 SF

Base Plate 50 BP

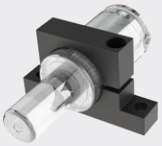

End Support 50 ES / 50 HM

Please note: gas springs should always be positively retained where possible. How to order: Spring Type x Stroke + Mounting Type ie: MX1000 x 013 + FF

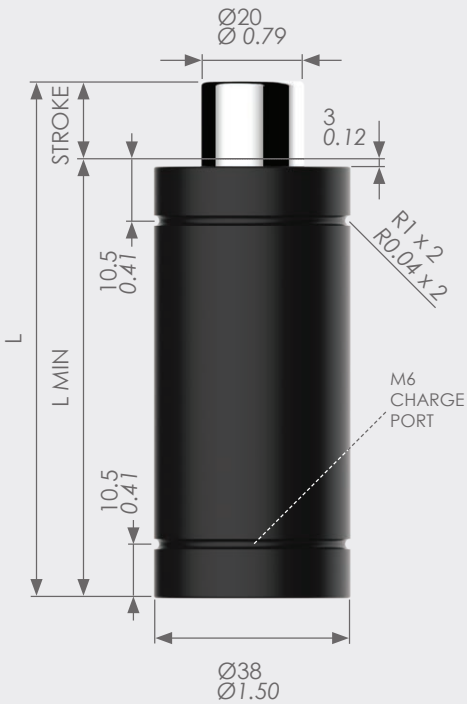

SPECIAL STROKE SIZES AVAILABLE UPON REQUEST

MODEL/STROKE	SPRING FORCE (daN) INITIAL (daN) *(lbs)*	SPRING FORCE (daN) MAXIMUM (daN) *(lbs)*	L MIN (MM) *(in.)*	L (MM) *(in.)*	GAS VOL. (L)	WEIGHT (KG) *(lbs)*
HDG010-06	**1060**	**1600**	**55**	**61**	**0.014**	**0.30**
	2383	*3597*	*2.17*	*2.40*		*0.66*
HDG010-10		**1600**	**68**	**78**	**0.024**	**0.40**
		3597	*2.68*	*3.07*		*0.88*
HDG010-16		**1600**	**84**	**100**	**0.036**	**0.50**
		3597	*3.31*	*3.94*		*1.10*
HDG010-25		**1600**	**110**	**135**	**0.056**	**0.50**
		3597	*4.33*	*5.31*		*1.10*
HDG010-32		**1600**	**135**	**167**	**0.074**	**0.70**
		3597	*5.31*	*6.57*		*1.54*
HDG010-40		**1600**	**155**	**195**	**0.092**	**0.80**
		3597	*6.10*	*7.68*		*1.76*
HDG010-50		**1600**	**180**	**230**	**0.110**	**0.90**
		3597	*7.09*	*7.06*		*1.98*

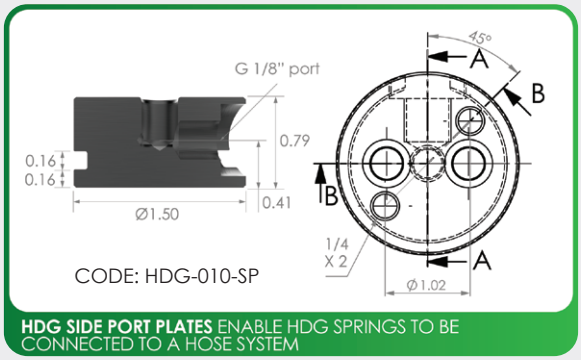

HOSE SYSTEMS AVAILABLE WITH SIDE PORT

USE ONLY NITROGEN

MAX. PRESSURE:	MIN. PRESSURE:	MAX. PISTON VELOCITY:
150 BAR *2176 PSI*	**25 BAR** *363 PSI*	**0.8M/SEC** *2.62ft/SEC*

SERVICE KIT HDG010

PED 2014/68/EU

MOUNTING EXAMPLES

(all dimensions are mm, unless otherwise stated) for other possible mounting options see pages 91 - 94

2 x M6 Tapped Holes

Square Front Flange 38 SFF

Front Flange 38 FF

HDG-010-SP + Square Flange 38 SF

Please note: gas springs should always be positively retained where possible. How to order: Spring Type x Stroke + Mounting Type ie: HDG010 x 06 + FF

CONTENTS

1500 - 1800KG
3307 - 3968LBS

EX1500	PAGE 61
G-EX1500	PAGE 62
T-EX1500	PAGE 63
ISNG1500	PAGE 64
HDG018	PAGE 65

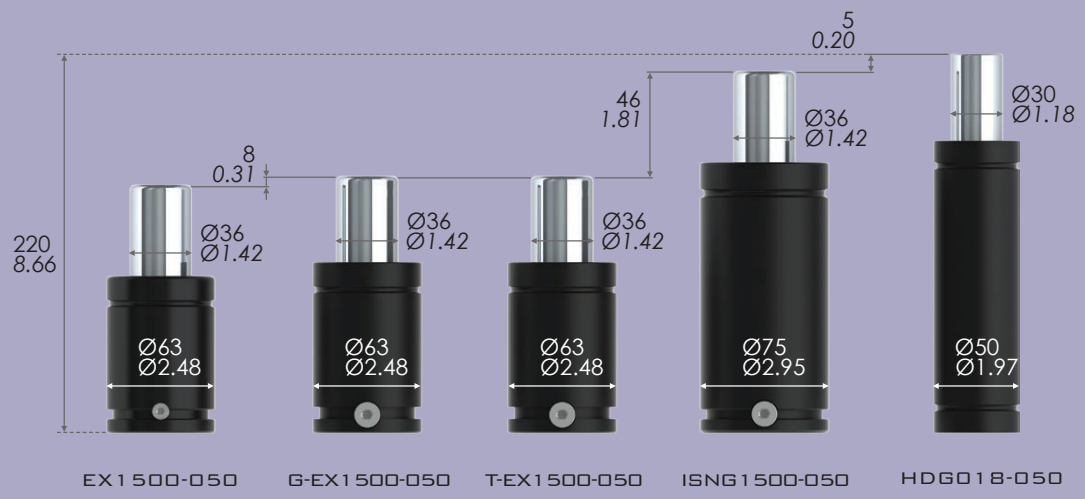

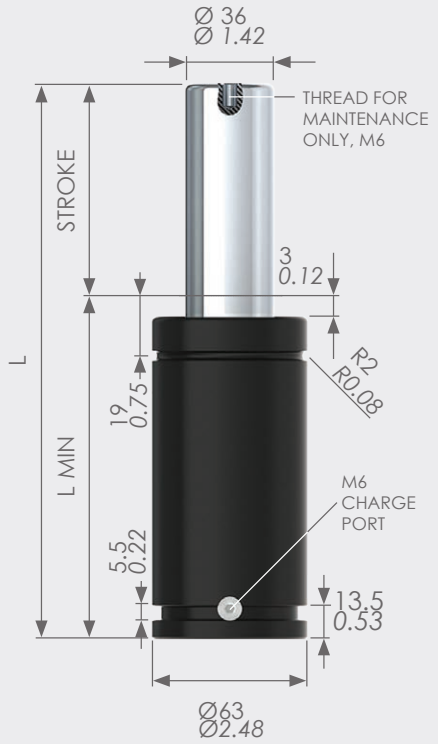

MODEL/STROKE	SPRING FORCE (daN)		L MIN (MM) (in.)	L (MM) (in.)	GAS VOL. (L)	WEIGHT (KG) (lbs)
	INITIAL (daN) (lbs)	MAXIMUM (daN) (lbs)				
EX1500-013	**1500** 3372	**2400** 5395	**57** 2.24	**70** 2.76	**0.05**	**0.98** 2.16
EX1500-016		**2410** 5418	**60** 2.36	**76** 2.99	**0.06**	**1.04** 2.29
EX1500-019		**2420** 5440	**63** 2.48	**82** 3.23	**0.07**	**1.09** 2.40
EX1500-025		**2430** 5463	**69** 2.72	**94** 3.70	**0.08**	**1.16** 2.56
EX1500-032		**2380** 5350	**76** 2.99	**108** 4.25	**0.11**	**1.24** 2.73
EX1500-038		**2390** 5373	**82** 3.23	**120** 4.72	**0.12**	**1.48** 3.26
EX1500-050		**2400** 5395	**94** 3.70	**144** 5.67	**0.15**	**1.50** 3.31
EX1500-063		**2410** 5418	**107** 4.21	**170** 6.69	**0.19**	**1.68** 3.70
EX1500-075		**2420** 5440	**119** 4.69	**194** 7.64	**0.22**	**1.82** 4.01
EX1500-080		**2420** 5440	**124** 4.88	**204** 8.03	**0.24**	**1.86** 4.10
EX1500-100		**2430** 5463	**144** 5.67	**244** 9.61	**0.29**	**2.21** 4.87
EX1500-125		**2430** 5463	**169** 6.65	**294** 11.57	**0.36**	**2.50** 5.51

SPECIAL STROKE SIZES AVAILABLE UPON REQUEST

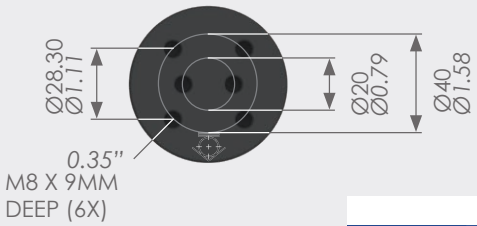

USE ONLY NITROGEN

MAX. PRESSURE:	MIN. PRESSURE:	MAX. PISTON VELOCITY:
150 BAR 2176 PSI	**20 BAR** 290 PSI	**1.6M/SEC** 5.25ft/SEC

SERVICE KIT EX1500

ISO PED 2014/68/EU

PROTECTION

CODE: SRS-36

MOUNTING EXAMPLES

(all dimensions are mm, unless otherwise stated)
for other possible mounting options see pages 91 - 94

2 X M8 Tapped Holes

Square Front Flange
63 SFF - 63 SFFA

Front Flange
63 FF

Square Flange
63 SF

Base Plate
63 BP

Please note: gas springs should always be positively retained where possible. How to order: Spring Type x Stroke + Mounting Type ie: EX1500 x 013 + FF

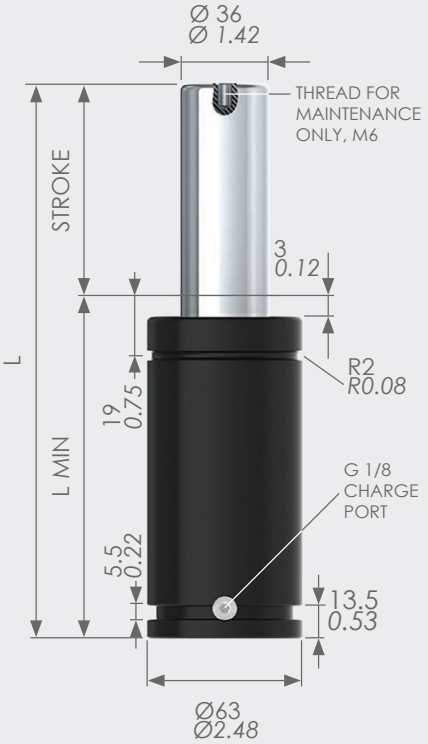

MODEL/STROKE	SPRING FORCE (daN)		L MIN (MM) (in.)	L (MM) (in.)	GAS VOL. (L)	WEIGHT (KG) (lbs)
	INITIAL (daN) (lbs)	MAXIMUM (daN) (lbs)				
G-EX1500-013	**1500**	**2400**	**65**	**78**	**0.05**	**0.89**
	3372	*5395*	*2.56*	*3.07*		*1.96*
G-EX1500-016		**2410**	**68**	**84**	**0.06**	**0.93**
		5418	*2.68*	*3.31*		*2.05*
G-EX1500-019		**2420**	**71**	**90**	**0.07**	**0.96**
		5440	*2.80*	*3.54*		*2.12*
G-EX1500-025		**2430**	**77**	**102**	**0.08**	**1.16**
		5463	*3.03*	*4.02*		*2.56*
G-EX1500-032		**2380**	**84**	**116**	**0.11**	**1.18**
		5350	*3.31*	*4.57*		*2.60*
G-EX1500-038		**2390**	**90**	**128**	**0.12**	**1.20**
		5373	*3.54*	*5.04*		*2.65*
G-EX1500-050		**2400**	**102**	**152**	**0.15**	**1.50**
		5395	*4.02*	*5.98*		*3.31*
G-EX1500-063		**2410**	**115**	**178**	**0.19**	**1.63**
		5418	*4.53*	*7.01*		*3.59*
G-EX1500-075		**2420**	**127**	**202**	**0.22**	**2.04**
		5440	*5.00*	*7.95*		*4.50*
G-EX1500-080		**2420**	**132**	**212**	**0.24**	**2.10**
		5440	*5.20*	*8.35*		*4.63*
G-EX1500-100		**2430**	**152**	**252**	**0.29**	**2.22**
		5463	*5.98*	*9.92*		*4.89*
G-EX1500-125		**2430**	**177**	**302**	**0.36**	**2.72**
		5463	*6.97*	*11.89*		*6.00*

SPECIAL STROKE SIZES AVAILABLE UPON REQUEST

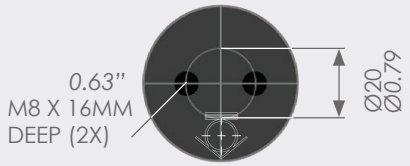

USE ONLY NITROGEN

MAX. PRESSURE:	MIN. PRESSURE:	MAX. PISTON VELOCITY:
150 BAR *2176 PSI*	**20 BAR** *290 PSI*	**1.6M/SEC** *5.25ft/SEC*

SERVICE KIT G-EX1500

PED 2014/68/EU

PROTECTION

CODE: SRS-36

MOUNTING EXAMPLES

(all dimensions are mm, unless otherwise stated)
for other possible mounting options see pages 91 - 94

2 X M8 Tapped Holes

Square Front Flange
63 SFF - 63 SFFA

Front Flange
63 FF

Square Flange
63 SF

Base Plate
63 BP

Please note: gas springs should always be positively retained where possible. How to order: Spring Type x Stroke + Mounting Type ie: G-EX1500 x 013 + FF

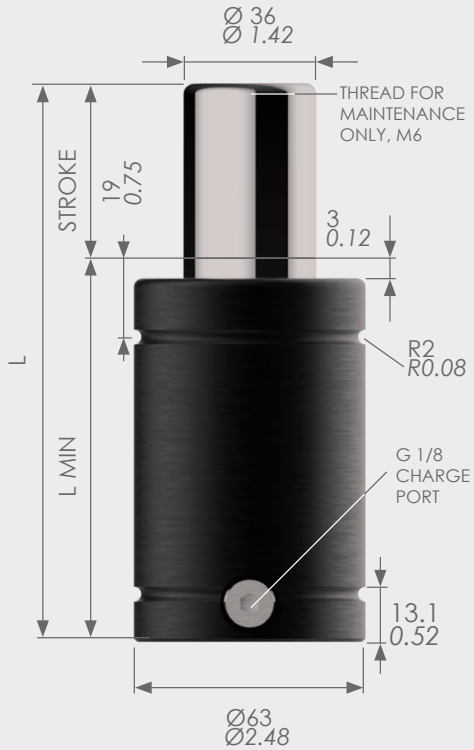

MODEL/STROKE	SPRING FORCE (daN)		L MIN (MM) (in.)	L (MM) (in.)	GAS VOL. (L)	WEIGHT (KG) (lbs)
	INITIAL (daN) (lbs)	MAXIMUM (daN) (lbs)				
T-EX1500-013	**1500**	**2400**	**65**	**78**	**0.05**	**0.89**
	3372	*5395*	*2.56*	*3.07*		*1.96*
T-EX1500-016		**2410**	**68**	**84**	**0.06**	**0.93**
		5418	*2.68*	*3.31*		*2.05*
T-EX1500-019		**2420**	**71**	**90**	**0.07**	**0.96**
		5440	*2.80*	*3.54*		*2.12*
T-EX1500-025		**2430**	**77**	**102**	**0.08**	**1.16**
		5463	*3.03*	*4.02*		*2.56*
T-EX1500-032		**2380**	**84**	**116**	**0.11**	**1.18**
		5350	*3.31*	*4.57*		*2.60*
T-EX1500-038		**2390**	**90**	**128**	**0.12**	**1.20**
		5373	*3.54*	*5.04*		*2.65*
T-EX1500-050		**2400**	**102**	**152**	**0.15**	**1.50**
		5395	*4.02*	*5.98*		*3.31*
T-EX1500-063		**2410**	**115**	**178**	**0.19**	**1.63**
		5418	*4.53*	*7.01*		*3.59*
T-EX1500-075		**2420**	**127**	**202**	**0.22**	**2.04**
		5440	*5.00*	*7.95*		*4.50*
T-EX1500-080		**2420**	**132**	**212**	**0.24**	**2.10**
		5440	*5.20*	*8.35*		*4.63*
T-EX1500-100		**2430**	**152**	**252**	**0.29**	**2.22**
		5463	*5.98*	*9.92*		*4.89*
T-EX1500-125		**2430**	**177**	**302**	**0.36**	**2.72**
		5463	*6.97*	*11.89*		*6.00*

SPECIAL STROKE SIZES AVAILABLE UPON REQUEST

USE ONLY NITROGEN

MAX. PRESSURE:	MIN. PRESSURE:	MAX. PISTON VELOCITY:
150 BAR *2176 PSI*	**20 BAR** *290 PSI*	**1.6M/SEC** *5.25ft/SEC*

SERVICE KIT T-EX1500

PED 2014/68/EU

PROTECTION

CODE: SRS-36

MOUNTING EXAMPLES

(all dimensions are mm, unless otherwise stated)
for other possible mounting options see pages 91 - 94

2 X M8 Tapped Holes

Square Front Flange
63 SFF - 63 SFFA

Front Flange
63 FF

Please note: gas springs should always be positively retained where possible. How to order: Spring Type x Stroke + Mounting Type ie: T-EX1500 x 013 + FF

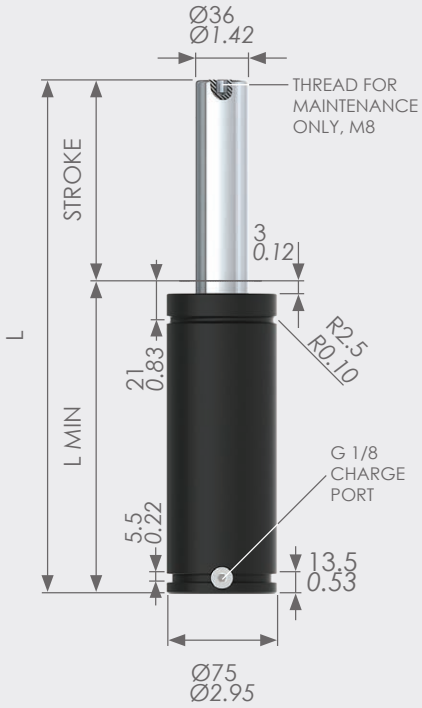

MODEL/STROKE	SPRING FORCE (daN) INITIAL (daN) *(lbs)*	SPRING FORCE (daN) MAXIMUM (daN) *(lbs)*	L MIN (MM) *(in.)*	L (MM) *(in.)*	GAS VOL. (L)	WEIGHT (KG) *(lbs)*
ISNG1500-025	**1500** *1500*	**2300** *5171*	**135** *5.31*	**160** *6.30*	**0.10**	**3.45** *7.61*
ISNG1500-038		**2300** *5171*	**148.1** *5.83*	**186.2** *7.33*	**0.15**	**3.87** *8.53*
ISNG1500-050		**2300** *5171*	**160** *6.30*	**210** *8.27*	**0.18**	**3.92** *8.64*
ISNG1500-063		**2300** *5171*	**173.5** *6.83*	**237** *9.33*	**0.22**	**4.16** *9.17*
ISNG1500-080		**2300** *5171*	**190** *7.48*	**270** *10.63*	**0.28**	**4.48** *9.88*
ISNG1500-100		**2300** *5171*	**210** *8.27*	**310** *12.20*	**0.34**	**4.66** *10.27*
ISNG1500-125		**2300** *5171*	**235** *9.25*	**360** *14.17*	**0.42**	**5.20** *11.46*
ISNG1500-160		**2300** *5171*	**270** *10.63*	**430** *16.93*	**0.53**	**5.91** *13.03*
ISNG1500-200		**2300** *5171*	**310** *12.20*	**510** *20.08*	**0.68**	**6.90** *15.21*
ISNG1500-250		**2300** *5171*	**360** *14.17*	**610** *24.02*	**0.81**	**7.60** *16.76*
ISNG1500-300		**2300** *5171*	**410** *16.14*	**710** *27.95*	**0.96**	**8.90** *19.62*

SPECIAL STROKE SIZES AVAILABLE UPON REQUEST

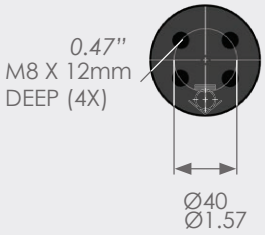

USE ONLY NITROGEN

MAX. PRESSURE:	MIN. PRESSURE:	MAX. PISTON VELOCITY:
150 BAR *2176 PSI*	**20 BAR** *290 PSI*	**1.6M/SEC** *5.25ft/SEC*

SERVICE KIT ISNG1500

ISO PED 2014/68/EU

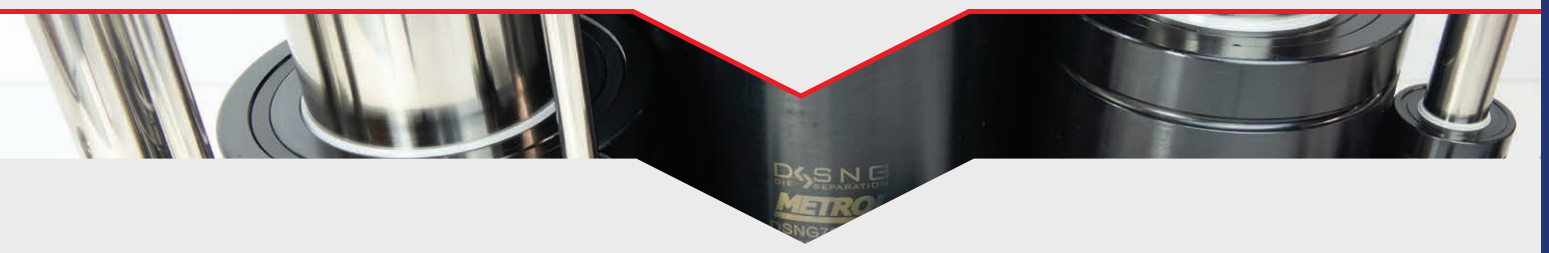

PROTECTION

CODE: SRS-36-A

MOUNTING EXAMPLES

(all dimensions are mm, unless otherwise stated)
for other possible mounting options see pages 91 - 94

4 X M8 Tapped Holes

Square Front Flange 75 SFF

Front Flange 75 FF

Square Flange 75 SF

Base Plate 75 BP

End Support 75 ES / 75 HM

Please note: gas springs should always be positively retained where possible. How to order: Spring Type x Stroke + Mounting Type ie: ISNG1500 x 025 + FF

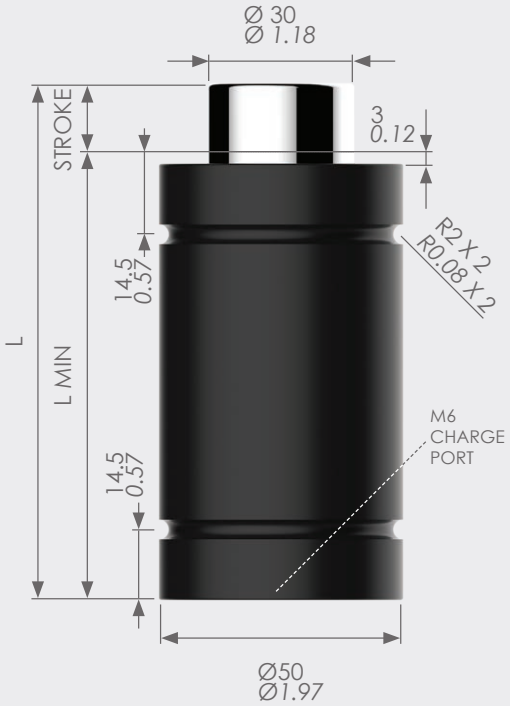

SPECIAL STROKE SIZES AVAILABLE UPON REQUEST

MODEL/STROKE	SPRING FORCE (daN) INITIAL (daN) *(lbs)*	SPRING FORCE (daN) MAXIMUM (daN) *(lbs)*	L MIN (MM) *(in.)*	L (MM) *(in.)*	GAS VOL. (L)	WEIGHT (KG) *(lbs)*
HDG018-06	**1800** *4047*	**2400** *5395*	**60** *2.36*	**66** *2.60*	**0.030**	**0.60** *1.32*
HDG018-10		**2500** *5620*	**70** *2.76*	**80** *3.15*	**0.044**	**0.70** *1.54*
HDG018-16		**2500** *5620*	**90** *3.54*	**106** *4.17*	**0.072**	**0.80** *1.76*
HDG018-25		**2600** *5845*	**110** *4.33*	**135** *5.31*	**0.100**	**0.90** *1.98*
HDG018-32		**2600** *5845*	**130** *5.12*	**162** *6.38*	**0.126**	**1.10** *2.42*
HDG018-40		**2600** *5845*	**150** *5.91*	**190** *7.48*	**0.150**	**1.20** *2.65*
HDG018-50		**2700** *6070*	**170** *6.69*	**220** *8.66*	**0.179**	**1.40** *3.09*
HDG018-65		**2800** *6295*	**206** *8.11*	**271** *10.67*	**0.240**	**1.50** *3.31*

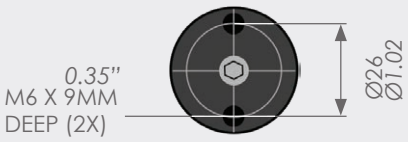

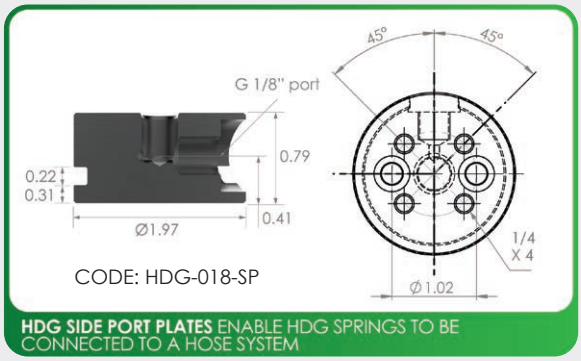

HOSE SYSTEMS AVAILABLE WITH SIDE PORT

USE ONLY NITROGEN

MAX. PRESSURE:	MIN. PRESSURE:	MAX. PISTON VELOCITY:
150 BAR *2176 PSI*	**25 BAR** *363 PSI*	**0.8M/SEC** *2.62ft/SEC*

SERVICE KIT HDG018

PED 2014/68/EU

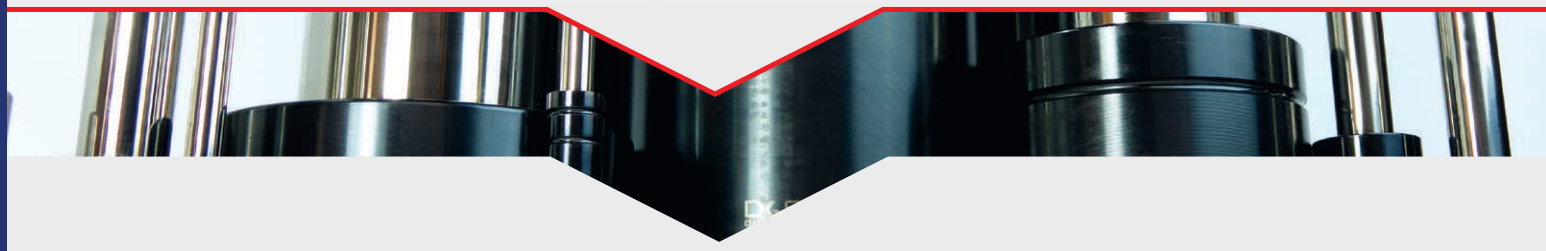

MOUNTING EXAMPLES

(all dimensions are mm, unless otherwise stated) for other possible mounting options see pages 91 - 94

2 x M6 Tapped Holes

Square Front Flange 50 SFF

Front Flange 50 FF

HDG-018-SP + Square Flange 50 SF

Please note: gas springs should always be positively retained where possible. How to order: Spring Type x Stroke + Mounting Type ie: HDG018 x 06 + FF

CONTENTS

2400 - 2900KG
5291 - 6393LBS

EX2400	PAGE 67
G-EX2400	PAGE 68
T-EX2400	PAGE 69
MX2400	PAGE 70
HDG029	PAGE 71

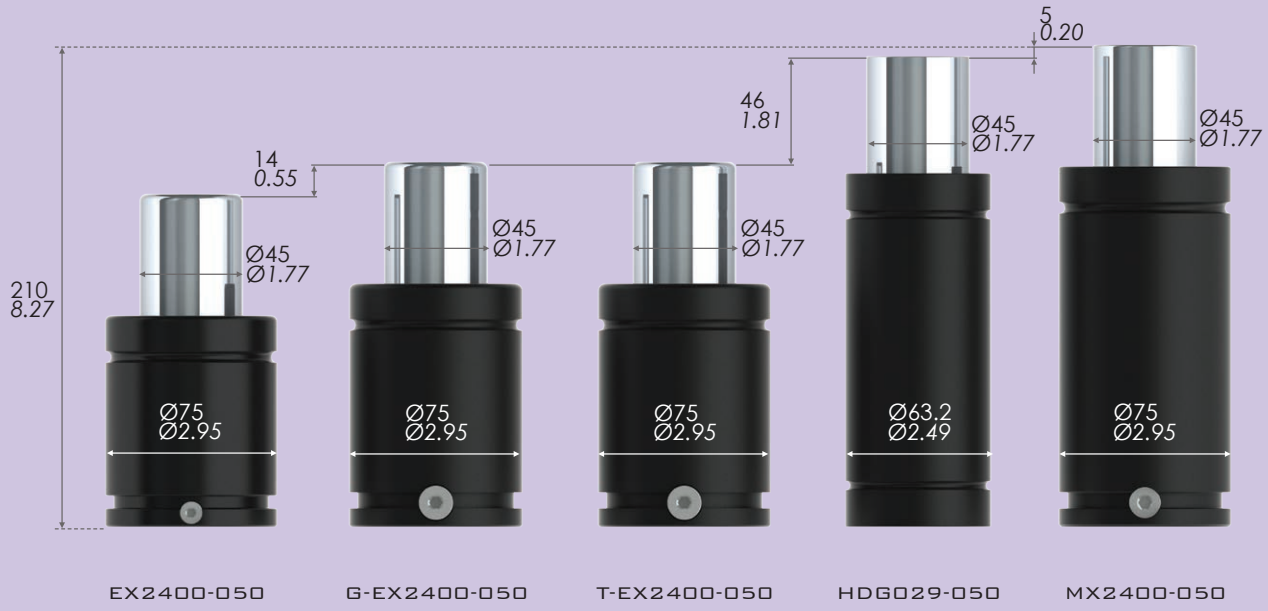

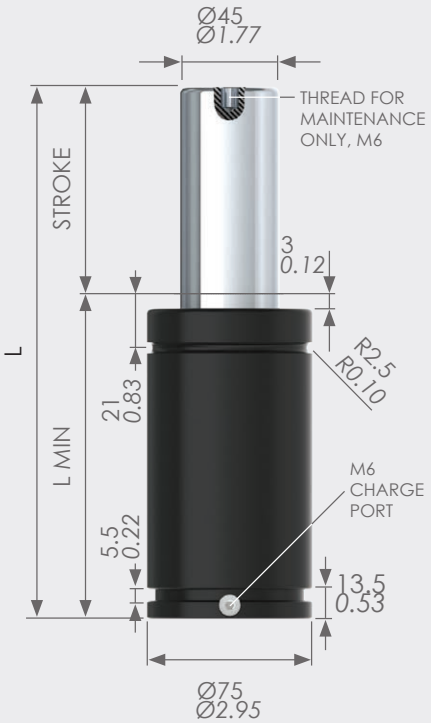

MODEL/STROKE	SPRING FORCE (daN)		L MIN (MM) (in.)	L (MM) (in.)	GAS VOL. (L)	WEIGHT (KG) (lbs)
	INITIAL (daN) (lbs)	MAXIMUM (daN) (lbs)				
EX2400-016	**2400** 5395	**3830** 8610	**61** 2.40	**77** 3.03	**0.09**	**1.48** 3.26
EX2400-019		**3850** 8655	**64** 2.52	**83** 3.27	**0.10**	**1.53** 3.37
EX2400-025		**3870** 8700	**70** 2.76	**95** 3.74	**0.13**	**1.63** 3.59
EX2400-032		**3860** 8678	**77** 3.03	**109** 4.29	**0.16**	**1.78** 3.92
EX2400-038		**3840** 8633	**83** 3.27	**121** 4.76	**0.18**	**1.90** 4.19
EX2400-050		**3920** 8813	**95** 3.74	**145** 5.71	**0.23**	**2.13** 4.70
EX2400-063		**3920** 8813	**108** 4.25	**171** 6.73	**0.28**	**2.34** 5.16
EX2400-075		**3920** 8813	**120** 4.72	**195** 7.68	**0.33**	**2.45** 5.40
EX2400-080		**3920** 8813	**125** 4.92	**205** 8.07	**0.35**	**2.66** 5.86
EX2400-100		**3930** 8835	**145** 5.71	**245** 9.65	**0.43**	**3.00** 6.61
EX2400-125		**3930** 8835	**170** 6.69	**295** 11.61	**0.54**	**3.50** 7.72

SPECIAL STROKE SIZES AVAILABLE UPON REQUEST

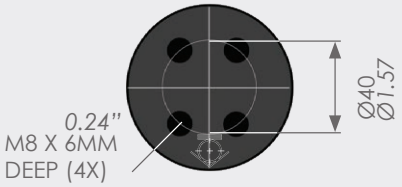

USE ONLY NITROGEN

MAX. PRESSURE:	MIN. PRESSURE:	MAX. PISTON VELOCITY:
150 BAR 2176 PSI	**20 BAR** 290 PSI	**1.6M/SEC** 5.25ft/SEC

SERVICE KIT EX2400

ISO

PED 2014/68/EU

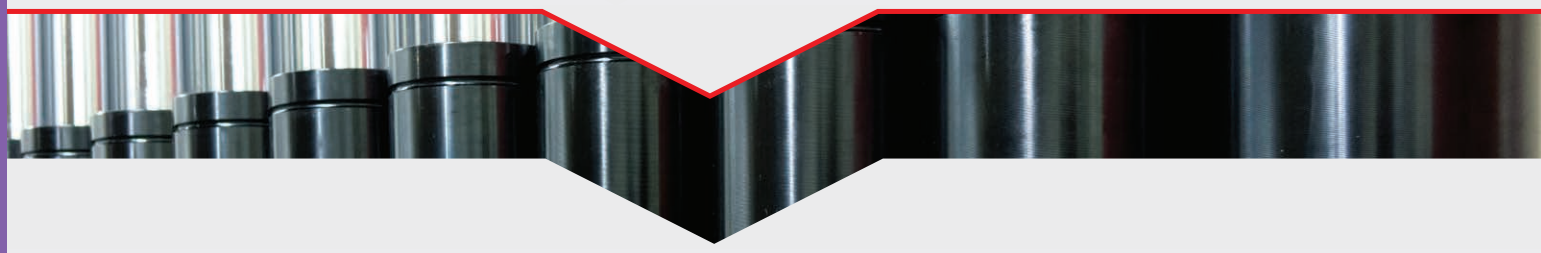

PROTECTION

CODE: SRS-45

MOUNTING EXAMPLES

(all dimensions are mm, unless otherwise stated)
for other possible mounting options see pages 91 - 94

4 X M8 Tapped Holes

Square Front Flange 75 SFF

Front Flange 75 FF

Square Flange 75 SF

Base Plate 75 BP

End Support 75 ES / 75 HM

Please note: gas springs should always be positively retained where possible. How to order: Spring Type x Stroke + Mounting Type ie: EX2400 x 016 + FF

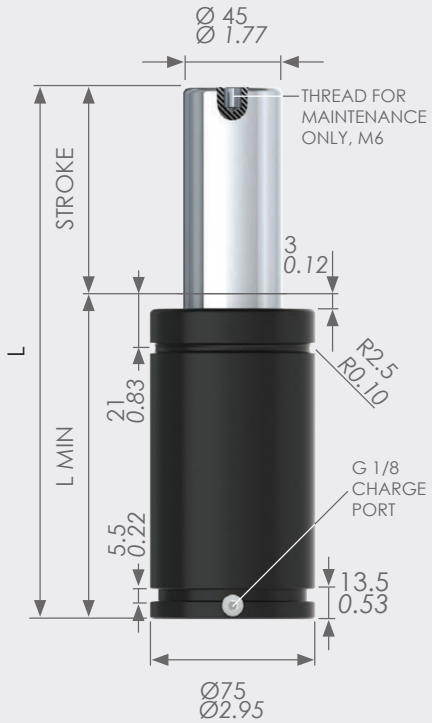

MODEL/STROKE	SPRING FORCE (daN) INITIAL (daN) *(lbs)*	SPRING FORCE (daN) MAXIMUM (daN) *(lbs)*	L MIN (MM) *(in.)*	L (MM) *(in.)*	GAS VOL. (L)	WEIGHT (KG) *(lbs)*
G-EX2400-016	**2400** *5395*	**3830** *8610*	**75** *2.95*	**91** *3.58*	**0.09**	**1.34** *2.95*
G-EX2400-019		**3850** *8655*	**78** *3.07*	**97** *3.82*	**0.10**	**1.38** *3.04*
G-EX2400-025		**3870** *8700*	**84** *3.31*	**109** *4.29*	**0.13**	**1.45** *3.20*
G-EX2400-032		**3860** *8678*	**91** *3.58*	**123** *4.84*	**0.16**	**1.90** *4.19*
G-EX2400-038		**3840** *8633*	**97** *3.82*	**135** *5.31*	**0.18**	**2.01** *4.43*
G-EX2400-050		**3920** *8813*	**109** *4.29*	**159** *6.26*	**0.23**	**2.13** *4.70*
G-EX2400-063		**3920** *8813*	**122** *4.80*	**185** *7.28*	**0.28**	**2.35** *5.18*
G-EX2400-075		**3920** *8813*	**134** *5.28*	**209** *8.23*	**0.33**	**2.70** *5.95*
G-EX2400-080		**3920** *8813*	**139** *5.47*	**219** *8.62*	**0.35**	**3.00** *6.61*
G-EX2400-100		**3930** *8835*	**159** *6.26*	**259** *10.20*	**0.43**	**3.15** *6.94*
G-EX2400-125		**3930** *8835*	**184** *7.24*	**309** *12.17*	**0.54**	**3.54** *7.80*

SPECIAL STROKE SIZES AVAILABLE UPON REQUEST

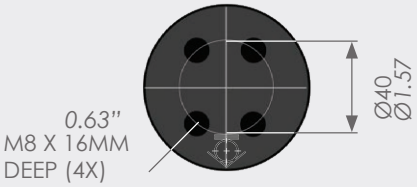

USE ONLY NITROGEN

MAX. PRESSURE:	MIN. PRESSURE:	MAX. PISTON VELOCITY:
150 BAR *2176 PSI*	**20 BAR** *290 PSI*	**1.6M/SEC** *5.25ft/SEC*

SERVICE KIT
G-EX2400

PED
2014/68/EU

PROTECTION

CODE: SRS-45

MOUNTING EXAMPLES

(all dimensions are mm, unless otherwise stated)
for other possible mounting options see pages 91 - 94

4 X M8 Tapped Holes | Square Front Flange 75 SFF | Front Flange 75 FF | Square Flange 75 SF | Base Plate 75 BP | End Support 75 ES / 75 HM

Please note: gas springs should always be positively retained where possible. How to order: Spring Type x Stroke + Mounting Type ie: G-EX2400 x 016 + FF

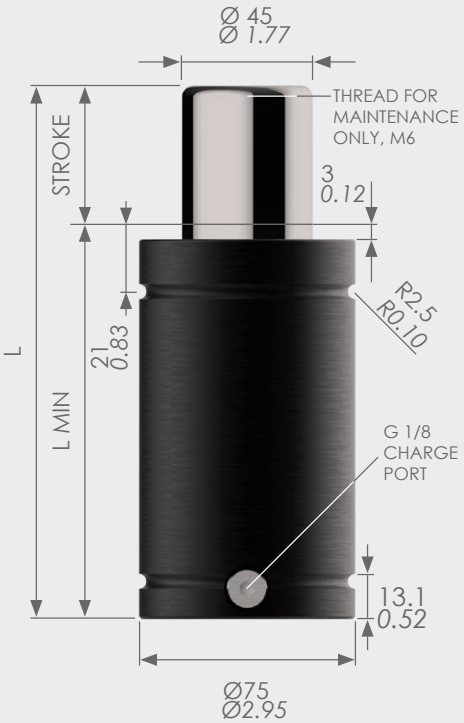

MODEL/STROKE	SPRING FORCE (daN)		L MIN (MM) *(in.)*	L (MM) *(in.)*	GAS VOL. (L)	WEIGHT (KG) *(lbs)*
	INITIAL (daN) *(lbs)*	MAXIMUM (daN) *(lbs)*				
T-EX2400-016	**2400** *5395*	**3830** *8610*	**75** *2.95*	**91** *3.58*	**0.09**	**1.34** *2.95*
T-EX2400-019		**3850** *8655*	**78** *3.07*	**97** *3.82*	**0.10**	**1.38** *3.04*
T-EX2400-025		**3870** *8700*	**84** *3.31*	**109** *4.29*	**0.13**	**1.45** *3.20*
T-EX2400-032		**3860** *8678*	**91** *3.58*	**123** *4.84*	**0.16**	**1.90** *4.19*
T-EX2400-038		**3840** *8633*	**97** *3.82*	**135** *5.31*	**0.18**	**2.01** *4.43*
T-EX2400-050		**3920** *8813*	**109** *4.29*	**159** *6.26*	**0.23**	**2.13** *4.70*
T-EX2400-063		**3920** *8813*	**122** *4.80*	**185** *7.28*	**0.28**	**2.35** *5.18*
T-EX2400-075		**3920** *8813*	**134** *5.28*	**209** *8.23*	**0.33**	**2.70** *5.95*
T-EX2400-080		**3920** *8813*	**139** *5.47*	**219** *8.62*	**0.35**	**3.00** *6.61*
T-EX2400-100		**3930** *8835*	**159** *6.26*	**259** *10.20*	**0.43**	**3.15** *6.94*
T-EX2400-125		**3930** *8835*	**184** *7.24*	**309** *12.17*	**0.54**	**3.54** *7.80*

SPECIAL STROKE SIZES AVAILABLE UPON REQUEST

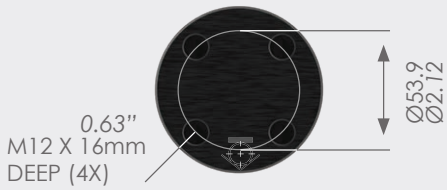

USE ONLY NITROGEN

MAX. PRESSURE:	MIN. PRESSURE:	MAX. PISTON VELOCITY:
150 BAR *2176 PSI*	**20 BAR** *290 PSI*	**1.6M/SEC** *5.25ft/SEC*

SERVICE KIT T-EX2400

PED 2014/68/EU

PROTECTION

CODE: SRS-45

MOUNTING EXAMPLES

(all dimensions are mm, unless otherwise stated)
for other possible mounting options see pages 91 - 94

4 X M8 Tapped Holes

Square Front Flange
75 SFF

Front Flange
75 FF

Lower Square Flange
75 LSF

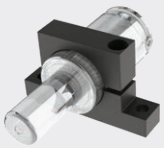

End Support
75 ES / 75 HM

Please note: gas springs should always be positively retained where possible. How to order: Spring Type x Stroke + Mounting Type ie: T-EX2400 x 016 + FF

MODEL/STROKE	SPRING FORCE (daN)		L MIN (MM) (in.)	L (MM) (in.)	GAS VOL. (L)	WEIGHT (KG) (lbs)
	INITIAL (daN) (lbs)	MAXIMUM (daN) (lbs)				
MX2400-025	**2400** 5395	**3710** 8340	**135** 5.31	**160** 6.30	**0.23**	**3.31** 7.30
MX2400-038		**3760** 8453	**148** 5.83	**186** 7.32	**0.28**	**3.59** 7.91
MX2400-050		**3790** 8520	**160** 6.30	**210** 8.27	**0.33**	**3.84** 8.47
MX2400-063		**3810** 8565	**173** 6.81	**236** 9.29	**0.38**	**4.07** 8.97
MX2400-075		**3830** 8610	**185** 7.28	**260** 10.24	**0.43**	**4.20** 9.26
MX2400-080		**3830** 8610	**190** 7.48	**270** 10.63	**0.45**	**4.48** 9.88
MX2400-100		**3850** 8655	**210** 8.27	**310** 12.20	**0.53**	**4.76** 10.49
MX2400-125		**3870** 8700	**235** 9.25	**360** 14.17	**0.63**	**5.28** 11.64
MX2400-150		**3880** 8722	**260** 10.24	**410** 16.14	**0.73**	**5.87** 12.94
MX2400-160		**3880** 8722	**270** 10.63	**430** 16.93	**0.77**	**6.07** 13.38
MX2400-175		**3890** 8745	**285** 11.22	**460** 18.11	**0.83**	**6.44** 14.20
MX2400-200		**3890** 8745	**310** 12.20	**510** 20.08	**0.93**	**6.78** 14.95
MX2400-250		**3900** 8768	**360** 14.17	**610** 24.02	**1.17**	**6.95** 15.32
MX2400-300		**3910** 8790	**410** 16.14	**710** 27.95	**1.33**	**7.44** 16.40

SPECIAL STROKE SIZES AVAILABLE UPON REQUEST

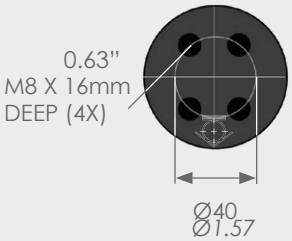

USE ONLY NITROGEN

MAX. PRESSURE:	MIN. PRESSURE:	MAX. PISTON VELOCITY:
150 BAR *2176 PSI*	**20 BAR** *290 PSI*	**1.6M/SEC** *5.25ft/SEC*

SERVICE KIT MX2400

ISO PED 2014/68/EU

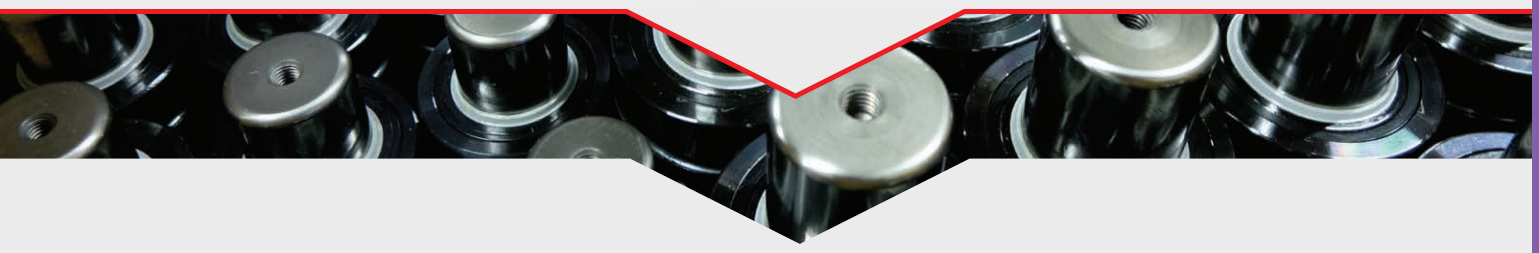

PROTECTION

CODE: SRS-45

MOUNTING EXAMPLES

(all dimensions are mm, unless otherwise stated)
for other possible mounting options see pages 91 - 94

4 X M8 Tapped Holes

Square Front Flange 75 SFF

Front Flange 75 FF

Square Flange 75 SF

Base Plate 75 BP

End Support 75 ES / 75 HM

Please note: gas springs should always be positively retained where possible. How to order: Spring Type x Stroke + Mounting Type ie: MX2400 x 025 + FF

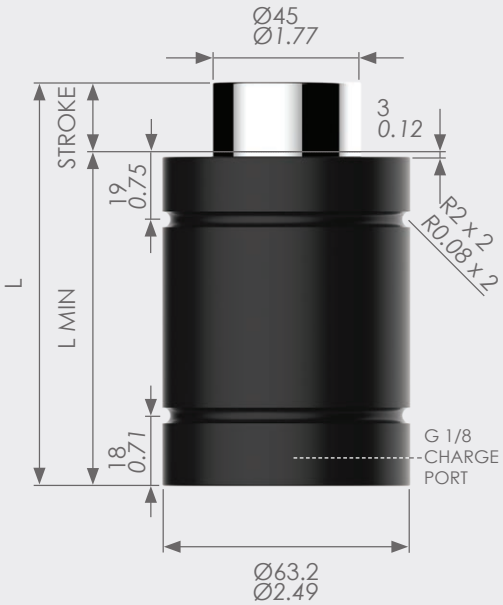

SPECIAL STROKE SIZES AVAILABLE UPON REQUEST

MODEL/STROKE	SPRING FORCE (daN)		L MIN (MM) (in.)	L (MM) (in.)	GAS VOL. (L)	WEIGHT (KG) (lbs)
	INITIAL (daN) (lbs)	MAXIMUM (daN) (lbs)				
HDG029-10	**2950** 6632	**4000** 8992	**75** 2.95	**85** 3.35	**0.08**	**1.10** 2.43
HDG029-16		**4200** 9442	**87** 3.43	**103** 4.06	**0.12**	**1.30** 2.87
HDG029-25		**4500** 10116	**105** 4.13	**130** 5.12	**0.16**	**1.50** 3.31
HDG029-32		**4620** 10386	**118** 4.65	**150** 5.91	**0.20**	**1.70** 3.75
HDG029-40		**4720** 10611	**135** 5.31	**175** 6.89	**0.24**	**1.70** 3.75
HDG029-50		**4500** 10116	**155** 6.10	**205** 8.07	**0.29**	**1.70** 3.75
HDG029-65		**4700** 10566	**191** 7.52	**256** 10.08	**0.35**	**1.80** 3.97

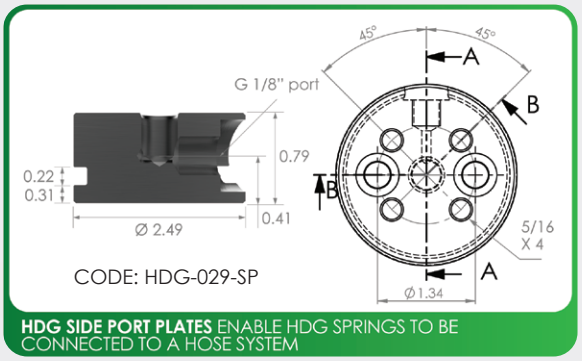

HOSE SYSTEMS AVAILABLE WITH SIDE PORT

USE ONLY NITROGEN

MAX. PRESSURE:	MIN. PRESSURE:	MAX. PISTON VELOCITY:
150 BAR 2176 PSI	**25 BAR** 363 PSI	**0.8M/SEC** 2.62ft/SEC

SERVICE KIT HDG029

PED 2014/68/EU

MOUNTING EXAMPLES

(all dimensions are mm, unless otherwise stated) for other possible mounting options see pages 91 - 94

2 X M8 Tapped Holes

Square Front Flange
63 SFF - 63 SFFA

Front Flange
63 FF

HDG-029-SP +
Square Flange 63 SF

Please note: gas springs should always be positively retained where possible. How to order: Spring Type x Stroke + Mounting Type ie: HDG029 x 10 + SFF

CONTENTS

3000 - 4700KG
6614 - 10362LBS

ISNG3000	PAGE 73	T-EX4200	PAGE 76
EX4200	PAGE 74	MX4200	PAGE 77
G-EX4200	PAGE 75	HDG047	PAGE 78

EX4200-050 G-EX4200-050 T-EX4200-050

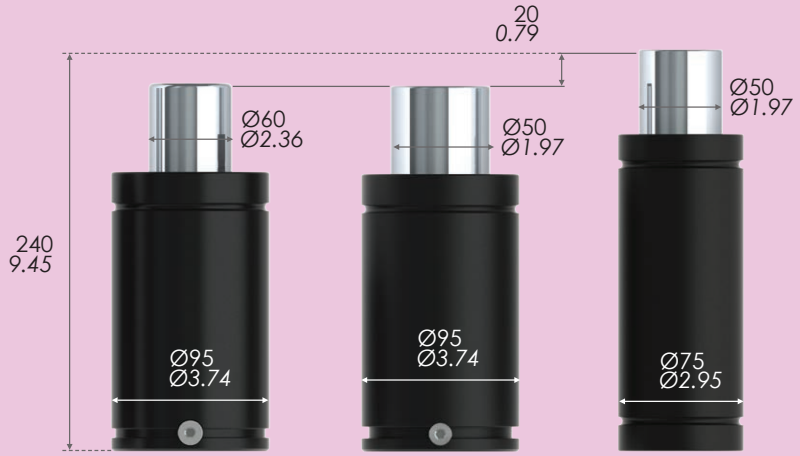

MX4200-050 ISNG3000-050 HDG047-050

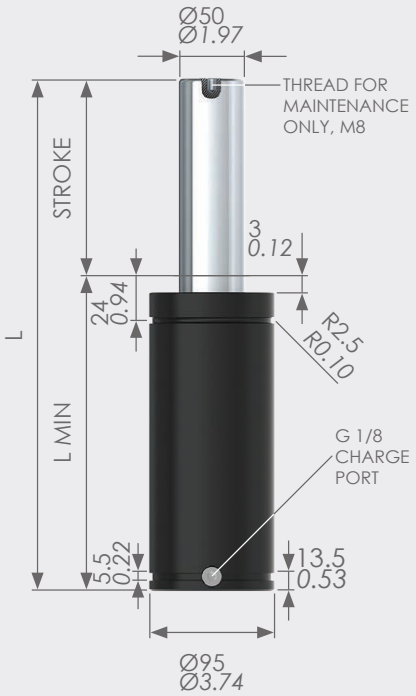

MODEL/STROKE	SPRING FORCE (daN)		L MIN (MM) *(in.)*	L (MM) *(in.)*	GAS VOL. (L)	WEIGHT (KG) *(lbs)*
	INITIAL (daN) *(lbs)*	MAXIMUM (daN) *(lbs)*				
ISNG3000-025	**3000** *6744*	**4200** *9442*	**145** *5.71*	**170** *6.69*	**0.20**	**6.00** *13.23*
ISNG3000-038		**4300** *9667*	**158.1** *6.22*	**196.2** *7.72*	**0.26**	**6.33** *13.96*
ISNG3000-050		**4400** *9892*	**170** *6.69*	**220** *8.66*	**0.32**	**6.69** *14.75*
ISNG3000-063		**4500** *10116*	**183.5** *7.22*	**247** *9.72*	**0.38**	**7.09** *15.63*
ISNG3000-080		**4600** *10341*	**200** *7.87*	**280** *11.02*	**0.46**	**7.50** *16.53*
ISNG3000-100		**4700** *10566*	**220** *8.66*	**320** *12.60*	**0.56**	**7.79** *17.17*
ISNG3000-125		**4700** *10566*	**245** *9.65*	**370** *14.57*	**0.69**	**8.70** *19.18*
ISNG3000-160		**4700** *10566*	**280** *11.02*	**440** *17.32*	**0.87**	**9.80** *21.61*
ISNG3000-200		**4800** *10791*	**320** *12.60*	**520** *20.47*	**1.07**	**11.00** *24.25*
ISNG3000-250		**4800** *10791*	**370** *14.57*	**620** *24.41*	**1.32**	**12.36** *27.25*
ISNG3000-300		**4800** *10791*	**420** *16.54*	**720** *28.35*	**1.57**	**15.30** *33.73*

SPECIAL STROKE SIZES AVAILABLE UPON REQUEST

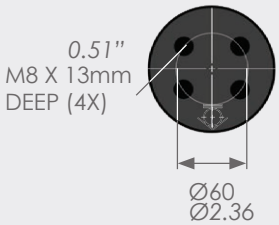

USE ONLY NITROGEN

MAX. PRESSURE:	MIN. PRESSURE:	MAX. PISTON VELOCITY:
150 BAR *2176 PSI*	**20 BAR** *290 PSI*	**1.6M/SEC** *5.25ft/SEC*

SERVICE KIT ISNG3000

ISO

PED 2014/68/EU

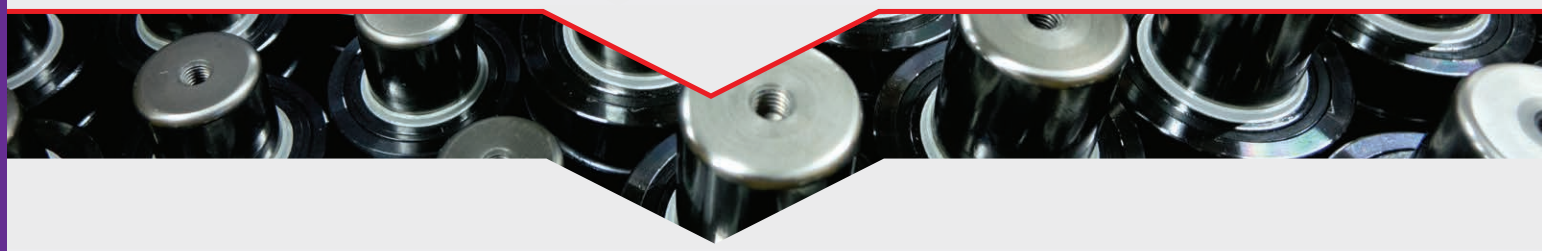

PROTECTION

CODE: SRS-50

MOUNTING EXAMPLES

(all dimensions are mm, unless otherwise stated)
for other possible mounting options see pages 91 - 94

4 X M8 Tapped Holes

Square Front Flange 95 SFF

Front Flange 95 FF

Square Flange 95 SF

Base Plate 95 BP

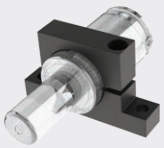

End Support 95 ES / 95 HM

Please note: gas springs should always be positively retained where possible. How to order: Spring Type x Stroke + Mounting Type ie: ISNG3000 x 025 + FF

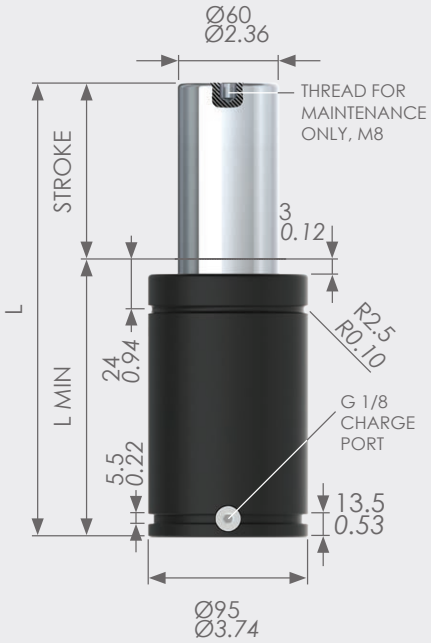

MODEL/STROKE	SPRING FORCE (daN)		L MIN (MM) *(in.)*	L (MM) *(in.)*	GAS VOL. (L)	WEIGHT (KG) *(lbs)*
	INITIAL (daN) *(lbs)*	MAXIMUM (daN) *(lbs)*				
EX4200-016	**4200** *9442*	**6170** *13871*	**74** *2.91*	**90** *3.54*	**0.15**	**2.95** *6.50*
EX4200-019		**6370** *14320*	**77** *3.03*	**96** *3.78*	**0.18**	**3.05** *6.72*
EX4200-025		**6080** *13668*	**83** *3.27*	**108** *4.25*	**0.26**	**3.22** *7.10*
EX4200-032		**6430** *14455*	**90** *3.54*	**122** *4.80*	**0.30**	**3.38** *7.45*
EX4200-038		**6580** *14792*	**96** *3.78*	**134** *5.28*	**0.32**	**3.59** *7.91*
EX4200-050		**6700** *15062*	**108** *4.25*	**158** *6.22*	**0.40**	**3.87** *8.53*
EX4200-063		**6780** *15242*	**121** *4.76*	**184** *7.24*	**0.49**	**4.23** *9.33*
EX4200-075		**6800** *15287*	**133** *5.24*	**208** *8.19*	**0.58**	**4.58** *10.10*
EX4200-080		**6860** *15422*	**138** *5.43*	**218** *8.58*	**0.61**	**4.75** *10.47*
EX4200-100		**6910** *15534*	**158** *6.22*	**258** *10.16*	**0.74**	**5.27** *11.62*
EX4200-125		**6960** *15647*	**183** *7.20*	**308** *12.13*	**0.91**	**5.50** *12.13*

SPECIAL STROKE SIZES AVAILABLE UPON REQUEST

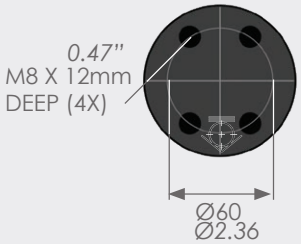

USE ONLY NITROGEN

MAX. PRESSURE:	MIN. PRESSURE:	MAX. PISTON VELOCITY:
150 BAR *2176 PSI*	**20 BAR** *290 PSI*	**1.6M/SEC** *5.25ft/SEC*

SERVICE KIT EX4200

ISO

PED 2014/68/EU

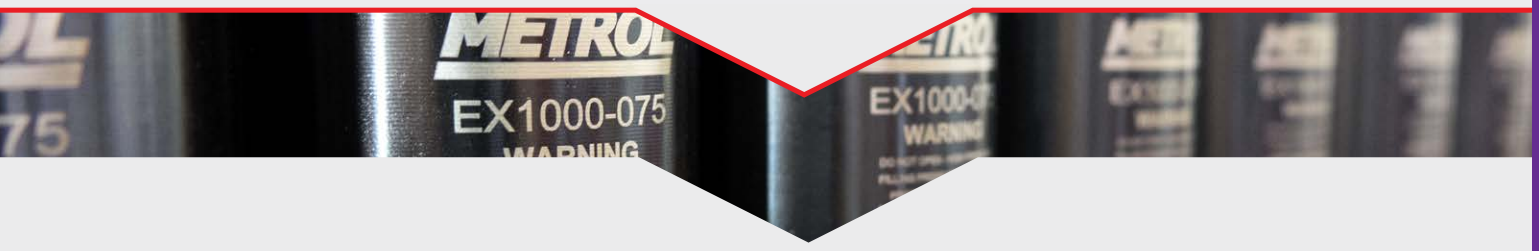

PROTECTION

CODE: SRS-60

MOUNTING EXAMPLES

(all dimensions are mm, unless otherwise stated)
for other possible mounting options see pages 91 - 94

4 X M8 Tapped Holes

Square Front Flange 95 SFF

Front Flange 95 FF

Square Flange 95 SF

Base Plate 95 BP

End Support 95 ES / 95 HM

Please note: gas springs should always be positively retained where possible. How to order: Spring Type x Stroke + Mounting Type ie: EX4200 x 016 + FF

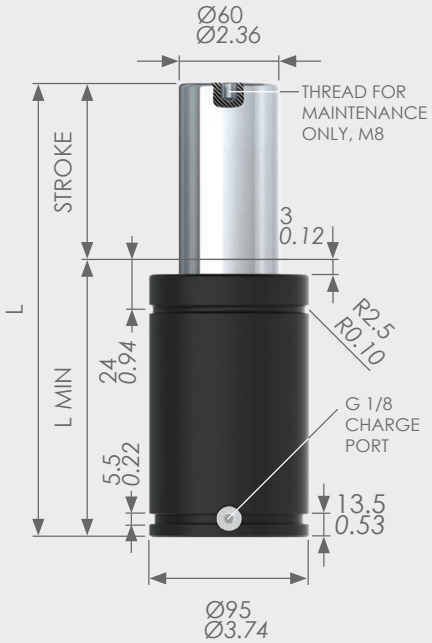

MODEL/STROKE	SPRING FORCE (daN)		L MIN (MM) (in.)	L (MM) (in.)	GAS VOL. (L)	WEIGHT (KG) (lbs)
	INITIAL (daN) (lbs)	MAXIMUM (daN) (lbs)				
G-EX4200-016	**4200** 9442	**6170** 13871	**78** 3.07	**94** 3.70	**0.15**	**2.95** 6.50
G-EX4200-019		**6370** 14320	**81** 3.19	**100** 3.94	**0.18**	**3.05** 6.72
G-EX4200-025		**6080** 13668	**87** 3.43	**112** 4.41	**0.26**	**3.20** 7.05
G-EX4200-032		**6430** 14455	**94** 3.70	**126** 4.96	**0.30**	**3.38** 7.45
G-EX4200-038		**6580** 14792	**100** 3.94	**138** 5.43	**0.32**	**3.59** 7.91
G-EX4200-050		**6700** 15062	**112** 4.41	**162** 6.38	**0.40**	**3.62** 7.98
G-EX4200-063		**6780** 15242	**125** 4.92	**188** 7.40	**0.49**	**4.37** 9.63
G-EX4200-075		**6800** 15287	**137** 5.39	**212** 8.35	**0.58**	**4.58** 10.10
G-EX4200-080		**6860** 15422	**142** 5.59	**222** 8.74	**0.61**	**4.70** 10.36
G-EX4200-100		**6910** 15534	**162** 6.38	**262** 10.32	**0.74**	**5.27** 11.62
G-EX4200-125		**6960** 15647	**187** 7.36	**312** 12.28	**0.91**	**5.42** 11.95

SPECIAL STROKE SIZES AVAILABLE UPON REQUEST

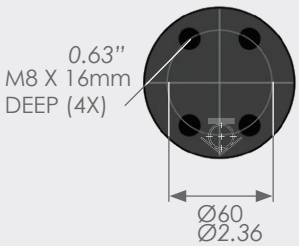

USE ONLY NITROGEN

MAX. PRESSURE:	MIN. PRESSURE:	MAX. PISTON VELOCITY:
150 BAR *2176 PSI*	**20 BAR** *290 PSI*	**1.6M/SEC** *5.25ft/SEC*

SERVICE KIT G-EX4200

PED 2014/68/EU

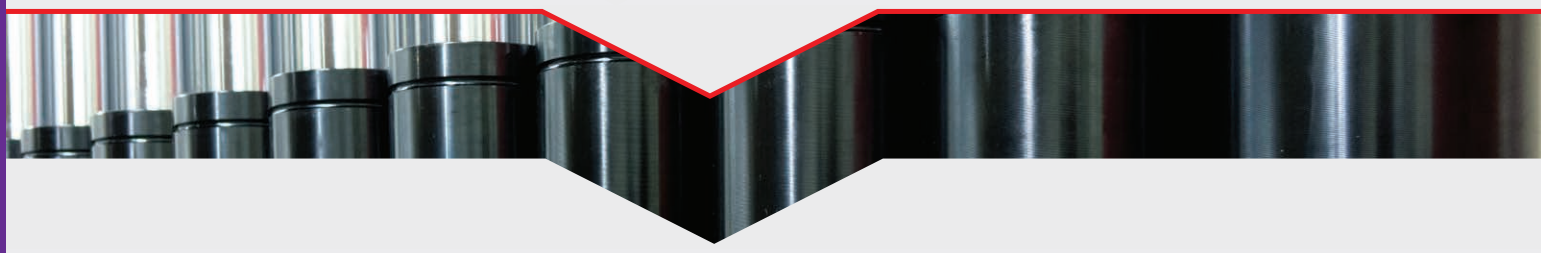

PROTECTION

CODE: SRS-60

MOUNTING EXAMPLES

(all dimensions are mm, unless otherwise stated)
for other possible mounting options see pages 91 - 94

4 X M8 Tapped Holes

Square Front Flange 95 SFF

Front Flange 95 FF

Square Flange 95 SF

Base Plate 95 BP

End Support 95 ES / 95 HM

Please note: gas springs should always be positively retained where possible. How to order: Spring Type x Stroke + Mounting Type ie: G-EX4200 x 016 + FF

MODEL/STROKE	SPRING FORCE (daN)		L MIN (MM) (in.)	L (MM) (in.)	GAS VOL. (L)	WEIGHT (KG) (lbs)
	INITIAL (daN) (lbs)	MAXIMUM (daN) (lbs)				
T-EX4200-016	**4200** 9442	**6170** 13871	**78** 3.07	**94** 3.70	**0.15**	**2.95** 6.50
T-EX4200-019		**6370** 14320	**81** 3.19	**100** 3.94	**0.18**	**3.05** 6.72
T-EX4200-025		**6080** 13668	**87** 3.43	**112** 4.41	**0.26**	**3.20** 7.05
T-EX4200-032		**6430** 14455	**94** 3.70	**126** 4.96	**0.30**	**3.38** 7.45
T-EX4200-038		**6580** 14792	**100** 3.94	**138** 5.43	**0.32**	**3.59** 7.91
T-EX4200-050		**6700** 15062	**112** 4.41	**162** 6.38	**0.40**	**3.62** 7.98
T-EX4200-063		**6780** 15242	**125** 4.92	**188** 7.40	**0.49**	**4.37** 9.63
T-EX4200-075		**6800** 15287	**137** 5.39	**212** 8.35	**0.58**	**4.58** 10.10
T-EX4200-080		**6860** 15422	**142** 5.59	**222** 8.74	**0.61**	**4.70** 10.36
T-EX4200-100		**6910** 15534	**162** 6.38	**262** 10.32	**0.74**	**5.27** 11.62
T-EX4200-125		**6960** 15647	**187** 7.36	**312** 12.28	**0.91**	**5.42** 11.95

SPECIAL STROKE SIZES AVAILABLE UPON REQUEST

USE ONLY NITROGEN

MAX. PRESSURE:	MIN. PRESSURE:	MAX. PISTON VELOCITY:
150 BAR *2176 PSI*	**20 BAR** *290 PSI*	**1.6M/SEC** *5.25ft/SEC*

SERVICE KIT T-EX4200

PED 2014/68/EU

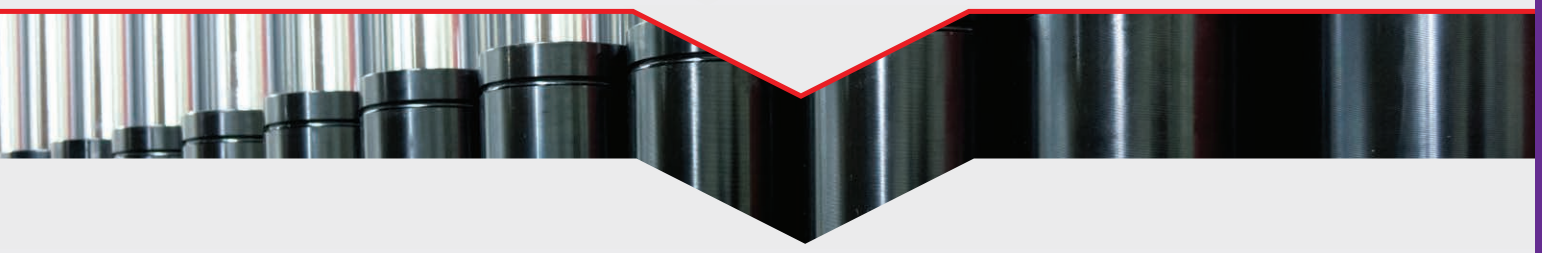

PROTECTION

CODE: SRS-60

MOUNTING EXAMPLES

(all dimensions are mm, unless otherwise stated)
for other possible mounting options see pages 91 - 94

4 X M8 Tapped Holes

Square Front Flange
95 SFF

Front Flange
95 FF

Lower Square Flange
95 LSF

End Support
95 ES / 95 HM

Please note: gas springs should always be positively retained where possible. How to order: Spring Type x Stroke + Mounting Type ie: T-EX4200 x 016 + FF

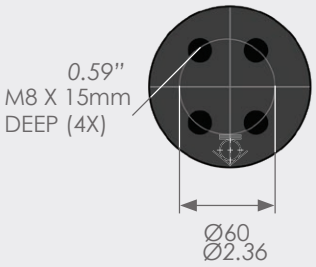

MODEL/STROKE	SPRING FORCE (daN) INITIAL (daN) *(lbs)*	SPRING FORCE (daN) MAXIMUM (daN) *(lbs)*	L MIN (MM) *(in.)*	L (MM) *(in.)*	GAS VOL. (L)	WEIGHT (KG) *(lbs)*
MX4200-025	**4200** *9442*	**5210** *17713*	**145** *5.71*	**170** *6.69*	**0.43**	**5.08** *11.20*
MX4200-038		**5510** *12387*	**158** *6.22*	**196** *7.72*	**0.52**	**5.90** *13.01*
MX4200-050		**5720** *12859*	**170** *6.69*	**220** *8.66*	**0.60**	**6.26** *13.80*
MX4200-063		**5900** *13264*	**183** *7.20*	**246** *9.69*	**0.68**	**6.61** *14.51*
MX4200-075		**6030** *13556*	**195** *7.68*	**270** *10.63*	**0.76**	**6.95** *15.32*
MX4200-080		**6080** *13668*	**200** *7.87*	**280** *11.02*	**0.80**	**7.48** *16.49*
MX4200-100		**6250** *14051*	**220** *8.66*	**320** *12.60*	**0.93**	**8.51** *18.76*
MX4200-125		**6400** *14388*	**245** *9.65*	**370** *14.57*	**1.10**	**9.10** *20.06*
MX4200-150		**6510** *14635*	**270** *10.63*	**420** *16.54*	**1.27**	**9.72** *21.43*
MX4200-160		**6550** *14725*	**280** *11.02*	**440** *17.32*	**1.33**	**10.00** *22.05*
MX4200-175		**6600** *14837*	**295** *11.61*	**470** *18.50*	**1.43**	**10.50** *23.15*
MX4200-200		**6680** *15017*	**320** *12.60*	**520** *20.47*	**1.60**	**12.30** *27.12*
MX4200-250		**6790** *15265*	**370** *14.57*	**620** *24.41*	**1.93**	**12.95** *28.55*
MX4200-300		**6870** *15444*	**420** *16.54*	**720** *28.35*	**2.27**	**13.78** *30.38*

SPECIAL STROKE SIZES AVAILABLE UPON REQUEST

USE ONLY NITROGEN

MAX. PRESSURE:	MIN. PRESSURE:	MAX. PISTON VELOCITY:
150 BAR *2176 PSI*	**20 BAR** *290 PSI*	**1.6M/SEC** *5.25ft/SEC*

SERVICE KIT MX4200

ISO PED 2014/68/EU

PROTECTION

CODE: SRS-60

MOUNTING EXAMPLES

(all dimensions are mm, unless otherwise stated)
for other possible mounting options see pages 91 - 94

4 X M8 Tapped Holes

Square Front Flange 95 SFF

Front Flange 95 FF

Square Flange 95 SF

Base Plate 95 BP

End Support 95 ES / 95 HM

Please note: gas springs should always be positively retained where possible. How to order: Spring Type x Stroke + Mounting Type ie: MX4200 x 025 + FF

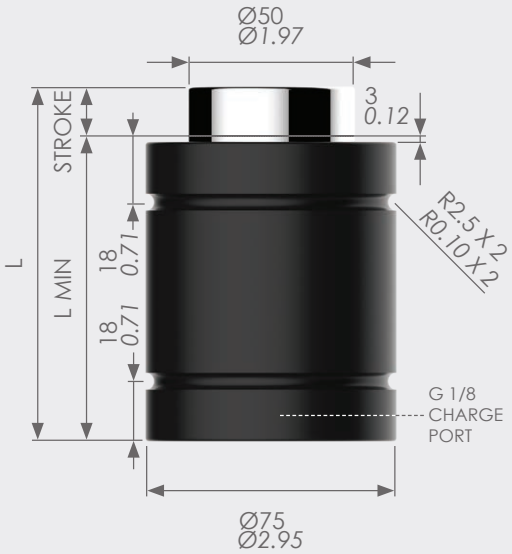

SPECIAL STROKE SIZES AVAILABLE UPON REQUEST

MODEL/STROKE	SPRING FORCE (daN)		L MIN (MM) *(in.)*	L (MM) *(in.)*	GAS VOL. (L)	WEIGHT (KG) *(lbs)*
	INITIAL (daN) *(lbs)*	MAXIMUM (daN) *(lbs)*				
HDG047-10	**4700** *10566*	**6700** *15062*	**70** *2.76*	**80** *3.15*	**0.10**	**1.40** *3.09*
HDG047-16		**6600** *14837*	**90** *3.54*	**106** *4.17*	**0.17**	**1.60** *3.53*
HDG047-25		**6800** *15287*	**110** *4.33*	**135** *5.31*	**0.24**	**2.00** *4.41*
HDG047-32		**6700** *15062*	**135** *5.31*	**167** *6.57*	**0.32**	**2.20** *4.85*
HDG047-40		**6700** *15062*	**160** *6.30*	**200** *7.87*	**0.41**	**2.80** *6.17*
HDG047-50		**6700** *15062*	**190** *7.48*	**240** *9.45*	**0.52**	**3.30** *7.28*
HDG047-65		**7100** *15961*	**208** *8.19*	**273** *10.75*	**0.62**	**3.90** *8.60*

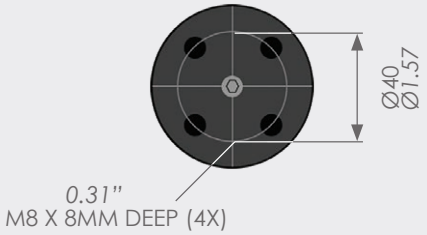

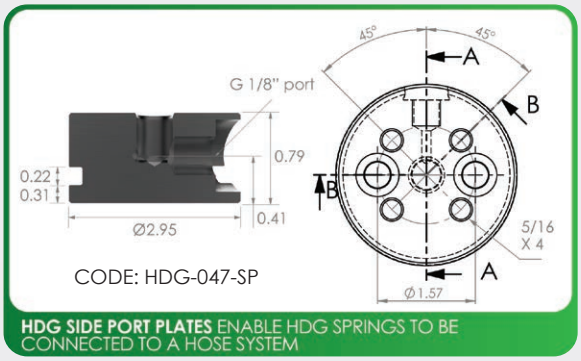

HOSE SYSTEMS AVAILABLE WITH SIDE PORT

USE ONLY NITROGEN

MAX. PRESSURE:	MIN. PRESSURE:	MAX. PISTON VELOCITY:
150 BAR *2176 PSI*	**25 BAR** *363 PSI*	**0.8M/SEC** *2.62ft/SEC*

SERVICE KIT HDG047

PED 2014/68/EU

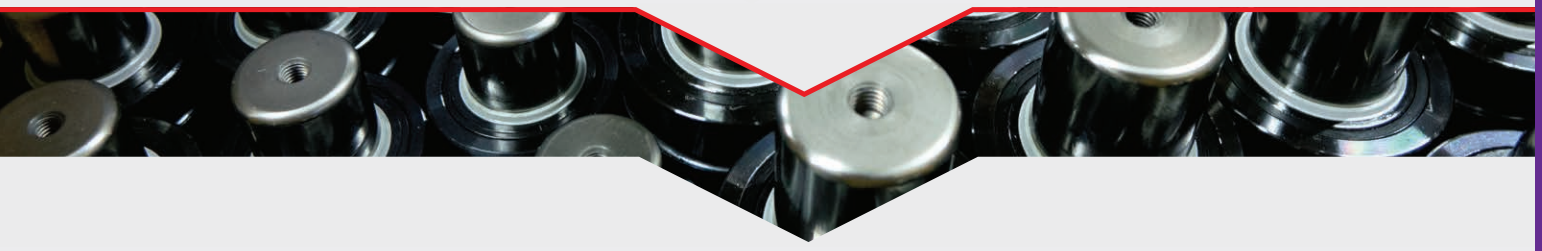

MOUNTING EXAMPLES

(all dimensions are mm, unless otherwise stated) for other possible mounting options see pages 91 - 94

4 X M8 Tapped Holes

Square Front Flange
75 SFF

Front Flange
75 FF

HDG-047-SP +
Square Flange 75 SF

Please note: gas springs should always be positively retained where possible. How to order: Spring Type x Stroke + Mounting Type ie: HDG047 x 10 + FF

5000 - 6600KG
11023 - 14551LBS

ISNG5000	PAGE 80
EX6600	PAGE 81
G-EX6600	PAGE 82
T-EX6600	PAGE 83
MX6600	PAGE 84

EX6600-050 G-EX6600-050 T-EX6600-050 ISNG5000-050 MX6600-050

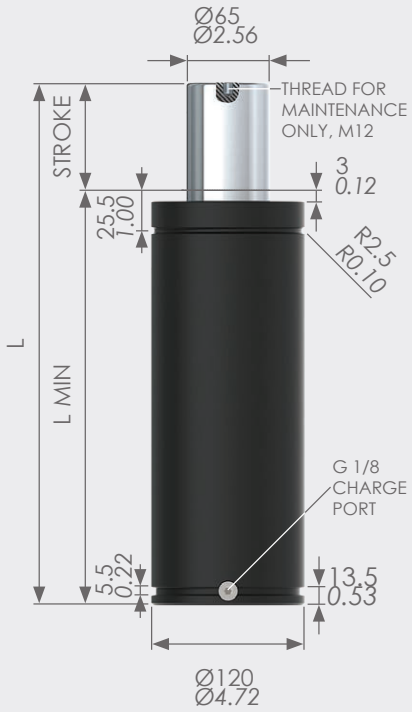

MODEL/STROKE	SPRING FORCE (daN) INITIAL (daN) *(lbs)*	SPRING FORCE (daN) MAXIMUM (daN) *(lbs)*	L MIN (MM) *(in.)*	L (MM) *(in.)*	GAS VOL. (L)	WEIGHT (KG) *(lbs)*
ISNG5000-025	**5000** *11240*	**7100** *15961*	**165** *6.50*	**190** *7.48*	**0.32**	**11.40** *25.13*
ISNG5000-038		**7500** *16861*	**178.1** *7.01*	**216.2** *8.51*	**0.42**	**11.70** *25.79*
ISNG5000-050		**7700** *17310*	**190** *7.48*	**240** *9.45*	**0.51**	**12.20** *26.90*
ISNG5000-063		**8000** *17985*	**203.5** *8.01*	**267** *10.51*	**0.60**	**12.70** *28.00*
ISNG5000-080		**8100** *18210*	**220** *8.66*	**300** *11.81*	**0.73**	**13.60** *29.98*
ISNG5000-100		**8200** *18434*	**240** *9.45*	**340** *13.39*	**0.89**	**14.60** *32.19*
ISNG5000-125		**8200** *18434*	**265** *10.43*	**390** *15.35*	**1.09**	**15.75** *34.72*
ISNG5000-160		**8300** *18659*	**300** *11.81*	**460** *18.11*	**1.36**	**17.80** *39.24*
ISNG5000-200		**8400** *18884*	**340** *13.39*	**540** *21.26*	**1.68**	**20.00** *44.09*
ISNG5000-250		**8400** *18884*	**390** *15.35*	**640** *25.20*	**2.07**	**22.30** *49.16*
ISNG5000-300		**8400** *18884*	**440** *17.32*	**740** *29.13*	**2.46**	**25.00** *55.12*

SPECIAL STROKE SIZES AVAILABLE UPON REQUEST

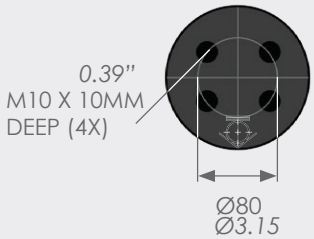

USE ONLY NITROGEN

MAX. PRESSURE:	MIN. PRESSURE:	MAX. PISTON VELOCITY:
150 BAR *2176 PSI*	**20 BAR** *290 PSI*	**1.6M/SEC** *5.25ft/SEC*

SERVICE KIT ISNG5000

ISO PED 2014/68/EU

PROTECTION

CODE: SRS-65

MOUNTING EXAMPLES

(all dimensions are mm, unless otherwise stated)
for other possible mounting options see pages 91 - 94

4 X M10 Tapped Holes

Square Front Flange 120 SFF

Front Flange 120 FF

Square Flange 120 SF

Base Plate 120 BP

End Support 120 ES / 120 HM

Please note: gas springs should always be positively retained where possible. How to order: Spring Type x Stroke + Mounting Type ie: ISNG5000 x 025 + FF

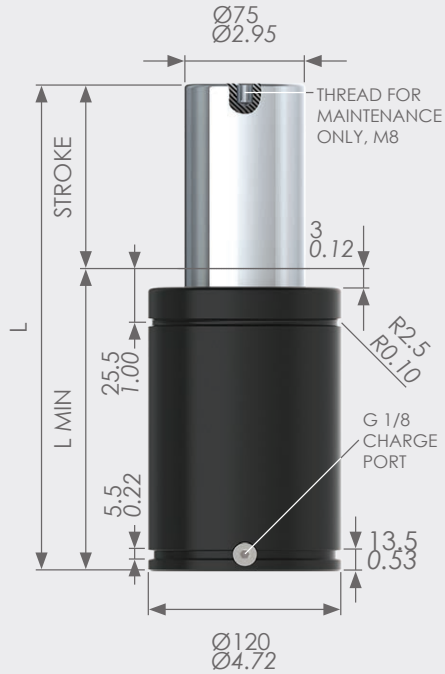

MODEL/STROKE	SPRING FORCE (daN)		L MIN (MM) (in.)	L (MM) (in.)	GAS VOL. (L)	WEIGHT (KG) (lbs)
	INITIAL (daN) (lbs)	MAXIMUM (daN) (lbs)				
EX6600-016	**6630**	**8900**	**84**	**100**	**0.32**	**5.56**
	14905	*20008*	*3.31*	*3.94*		*12.26*
EX6600-019		**9100**	**87**	**106**	**0.35**	**5.90**
		20458	*3.43*	*4.17*		*13.01*
EX6600-025		**9390**	**93**	**118**	**0.42**	**6.30**
		21110	*3.66*	*4.65*		*13.89*
EX6600-032		**9610**	**100**	**132**	**0.49**	**6.33**
		21604	*3.94*	*5.20*		*13.96*
EX6600-038		**9820**	**106**	**144**	**0.56**	**6.48**
		22076	*4.17*	*5.67*		*14.29*
EX6600-050		**10060**	**118**	**168**	**0.69**	**6.97**
		22616	*4.65*	*6.61*		*15.37*
EX6600-063		**10240**	**131**	**194**	**0.83**	**7.53**
		23020	*5.16*	*7.64*		*16.60*
EX6600-075		**10340**	**143**	**218**	**0.90**	**8.80**
		23245	*5.63*	*8.58*		*19.40*
EX6600-080		**10410**	**148**	**228**	**1.01**	**9.25**
		23403	*5.83*	*8.98*		*20.39*
EX6600-100		**10540**	**168**	**268**	**1.23**	**9.89**
		23695	*6.61*	*10.55*		*21.80*
EX6600-125		**10650**	**193**	**318**	**1.50**	**10.30**
		23942	*7.60*	*12.52*		*22.71*

SPECIAL STROKE SIZES AVAILABLE UPON REQUEST

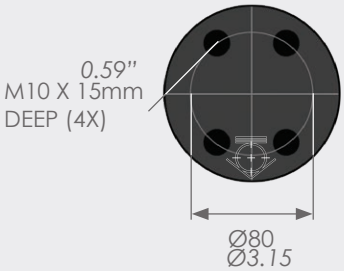

USE ONLY NITROGEN

MAX. PRESSURE:	MIN. PRESSURE:	MAX. PISTON VELOCITY:
150 BAR *2176 PSI*	**20 BAR** *290 PSI*	**1.6M/SEC** *5.25ft/SEC*

SERVICE KIT EX6600

ISO

PED 2014/68/EU

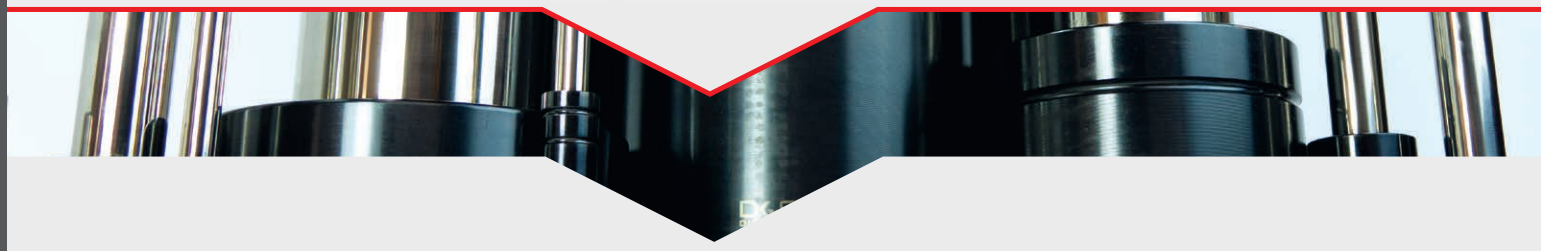

PROTECTION

CODE: SRS-75

MOUNTING EXAMPLES

(all dimensions are mm, unless otherwise stated)
for other possible mounting options see pages 91 - 94

4 X M10 Tapped Holes

Square Front Flange 120 SFF

Front Flange 120 FF

Square Flange 120 SF

Base Plate 120 BP

End Support 120 ES / 120 HM

Please note: gas springs should always be positively retained where possible. How to order: Spring Type x Stroke + Mounting Type ie: EX6600 x 016 + FF

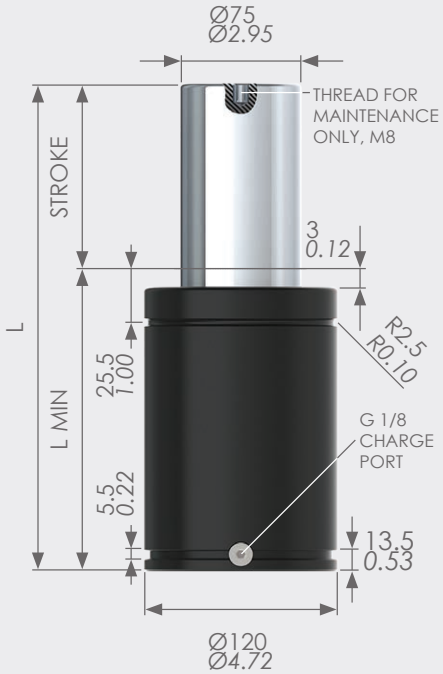

MODEL/STROKE	SPRING FORCE (daN) INITIAL (daN) *(lbs)*	SPRING FORCE (daN) MAXIMUM (daN) *(lbs)*	L MIN (MM) *(in.)*	L (MM) *(in.)*	GAS VOL. (L)	WEIGHT (KG) *(lbs)*
G-EX6600-016	**6630** *14905*	**8900** *20008*	**88** *3.46*	**104** *4.09*	**0.32**	**5.00** *11.02*
G-EX6600-019		**9100** *20458*	**91** *3.58*	**110** *4.33*	**0.35**	**5.11** *11.27*
G-EX6600-025		**9390** *21110*	**97** *3.82*	**122** *4.80*	**0.42**	**5.34** *11.77*
G-EX6600-032		**9610** *21604*	**104** *4.09*	**136** *5.35*	**0.49**	**5.61** *12.37*
G-EX6600-038		**9820** *22076*	**110** *4.33*	**148** *5.83*	**0.56**	**5.84** *12.88*
G-EX6600-050		**10060** *22616*	**122** *4.80*	**172** *6.77*	**0.69**	**6.31** *13.91*
G-EX6600-063		**10240** *23020*	**135** *5.31*	**198** *7.79*	**0.83**	**6.81** *15.01*
G-EX6600-075		**10340** *23245*	**147** *5.79*	**222** *8.74*	**0.90**	**7.27** *16.03*
G-EX6600-080		**10410** *23403*	**152** *5.98*	**232** *9.13*	**1.01**	**7.46** *16.45*
G-EX6600-100		**10540** *23695*	**172** *6.77*	**272** *10.71*	**1.23**	**8.23** *18.14*
G-EX6600-125		**10650** *23942*	**197** *7.76*	**322** *12.68*	**1.50**	**9.19** *20.26*

SPECIAL STROKE SIZES AVAILABLE UPON REQUEST

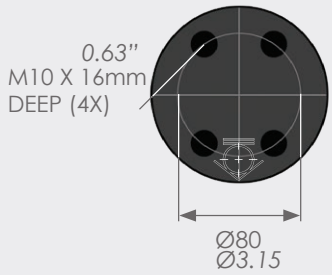

USE ONLY NITROGEN

MAX. PRESSURE:	MIN. PRESSURE:	MAX. PISTON VELOCITY:
150 BAR *2176 PSI*	**25 BAR** *363 PSI*	**1.6M/SEC** *5.25ft/SEC*

SERVICE KIT G-EX6600

ISO

PED 2014/68/EU

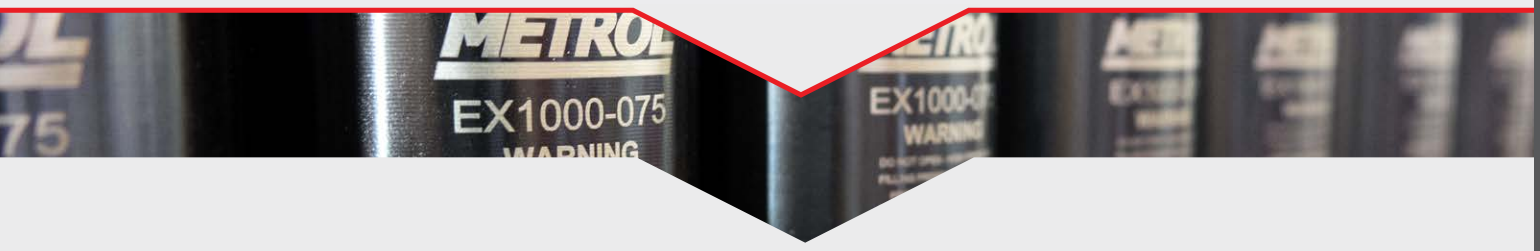

PROTECTION

CODE: SRS-75

MOUNTING EXAMPLES

(all dimensions are mm, unless otherwise stated)
for other possible mounting options see pages 91 - 94

4 X M10 Tapped Holes

Square Front Flange 120 SFF

Front Flange 120 FF

Square Flange 120 SF

Base Plate 120 BP

End Support 120 ES / 120 HM

Please note: gas springs should always be positively retained where possible. How to order: Spring Type x Stroke + Mounting Type ie: G-EX6600 x 016 + FF

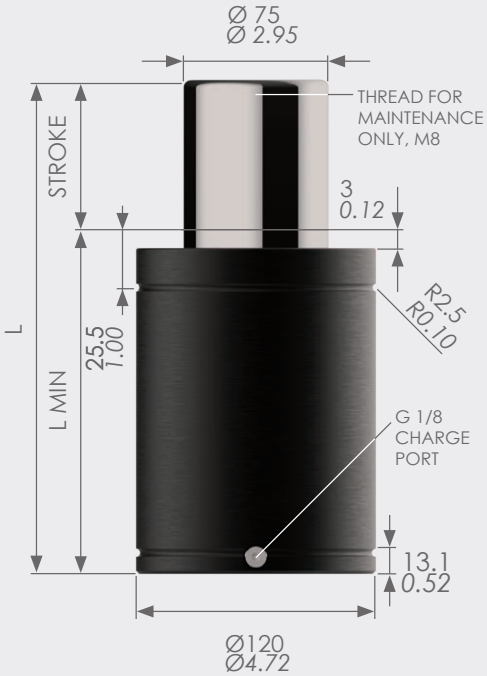

MODEL/STROKE	SPRING FORCE (daN)		L MIN (MM) (in.)	L (MM) (in.)	GAS VOL. (L)	WEIGHT (KG) (lbs)
	INITIAL (daN) (lbs)	MAXIMUM (daN) (lbs)				
T-EX6600-016	**6630** 14905	**8900** 20008	**88** 3.46	**104** 4.09	**0.32**	**5.00** 11.02
T-EX6600-019		**9100** 20458	**91** 3.58	**110** 4.33	**0.35**	**5.11** 11.27
T-EX6600-025		**9390** 21110	**97** 3.82	**122** 4.80	**0.42**	**5.34** 11.77
T-EX6600-032		**9610** 21604	**104** 4.09	**136** 5.35	**0.49**	**5.61** 12.37
T-EX6600-038		**9820** 22076	**110** 4.33	**148** 5.83	**0.56**	**5.84** 12.88
T-EX6600-050		**10060** 22616	**122** 4.80	**172** 6.77	**0.69**	**6.31** 13.91
T-EX6600-063		**10240** 23020	**135** 5.31	**198** 7.79	**0.83**	**6.81** 15.01
T-EX6600-075		**10340** 23245	**147** 5.79	**222** 8.74	**0.90**	**7.27** 16.03
T-EX6600-080		**10410** 23403	**152** 5.98	**232** 9.13	**1.01**	**7.46** 16.45
T-EX6600-100		**10540** 23695	**172** 6.77	**272** 10.71	**1.23**	**8.23** 18.14
T-EX6600-125		**10650** 23942	**197** 7.76	**322** 12.68	**1.50**	**9.19** 20.26

SPECIAL STROKE SIZES AVAILABLE UPON REQUEST

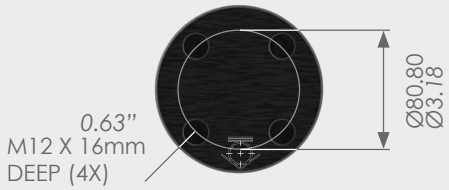

USE ONLY NITROGEN

MAX. PRESSURE:	MIN. PRESSURE:	MAX. PISTON VELOCITY:
150 BAR *2176 PSI*	**20 BAR** *290 PSI*	**1.6M/SEC** *5.25ft/SEC*

SERVICE KIT T-EX6600

ISO

PED 2014/68/EU

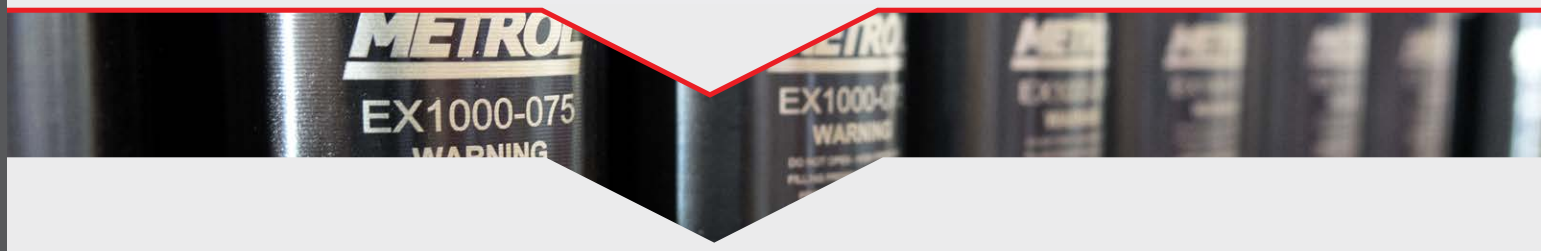

PROTECTION

CODE: SRS-75

MOUNTING EXAMPLES

(all dimensions are mm, unless otherwise stated)
for other possible mounting options see pages 91 - 94

4 X M10 Tapped Holes

Square Front Flange
120 SFF

Front Flange
120 FF

Lower Square Flange
120 LSF

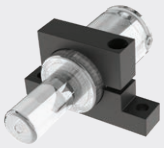

End Support
120 ES / 120 HM

Please note: gas springs should always be positively retained where possible. How to order: Spring Type x Stroke + Mounting Type ie: T-EX6600 x 016 + FF

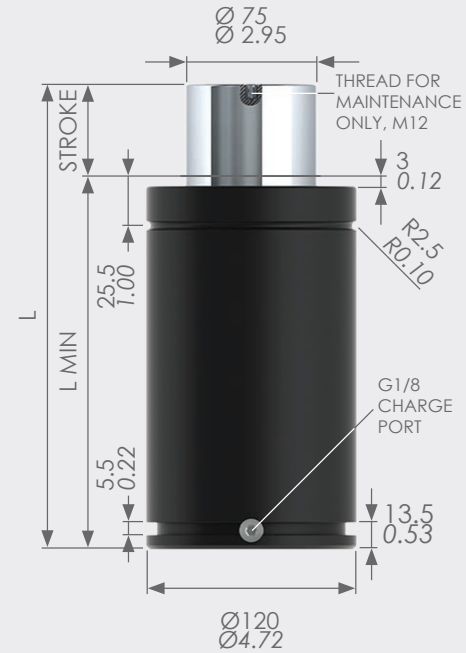

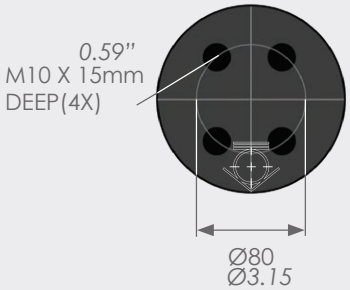

MODEL/STROKE	SPRING FORCE (daN) INITIAL (daN) *(lbs)*	SPRING FORCE (daN) MAXIMUM (daN) *(lbs)*	L MIN (MM) *(in.)*	L (MM) *(in.)*	GAS VOL. (L)	WEIGHT (KG) *(lbs)*
MX6600-025	**6630** *14905*	**7950** *17872*	**165** *6.50*	**190** *7.48*	**0.73**	**9.28** *20.46*
MX6600-038		**8390** *18861*	**178** *7.01*	**216** *8.50*	**0.87**	**9.81** *21.63*
MX6600-050		**8700** *19558*	**190** *7.48*	**240** *9.45*	**1.00**	**11.48** *25.31*
MX6600-063		**8970** *20165*	**203** *7.99*	**266** *10.47*	**1.13**	**12.60** *27.78*
MX6600-075		**9180** *20637*	**215** *8.46*	**290** *11.42*	**1.26**	**13.70** *30.20*
MX6600-080		**9260** *20817*	**220** *8.66*	**300** *11.81*	**1.31**	**14.40** *31.75*
MX6600-100		**9510** *21379*	**240** *9.45*	**340** *13.39*	**1.53**	**15.00** *33.07*
MX6600-125		**9760** *21941*	**265** *10.43*	**390** *15.35*	**1.79**	**16.00** *35.27*
MX6600-150		**9950** *22368*	**290** *11.42*	**440** *17.32*	**2.05**	**18.16** *40.04*
MX6600-160		**10010** *22503*	**300** *11.81*	**460** *18.11*	**2.16**	**18.80** *41.45*
MX6600-175		**10100** *22706*	**315** *12.40*	**490** *19.29*	**2.36**	**19.50** *42.99*
MX6600-200		**10220** *22975*	**340** *13.39*	**540** *21.26*	**2.58**	**19.58** *43.17*
MX6600-250		**10400** *23380*	**390** *15.35*	**640** *25.20*	**3.11**	**23.40** *51.59*
MX6600-300		**10530** *23672*	**440** *17.32*	**740** *29.13*	**3.64**	**24.46** *53.93*

SPECIAL STROKE SIZES AVAILABLE UPON REQUEST

USE ONLY NITROGEN

MAX. PRESSURE: **150 BAR** *2176 PSI*

MIN. PRESSURE: **20 BAR** *290 PSI*

MAX. PISTON VELOCITY: **1.6M/SEC** *5.25ft/SEC*

SERVICE KIT MX6600

ISO

PED 2014/68/EU

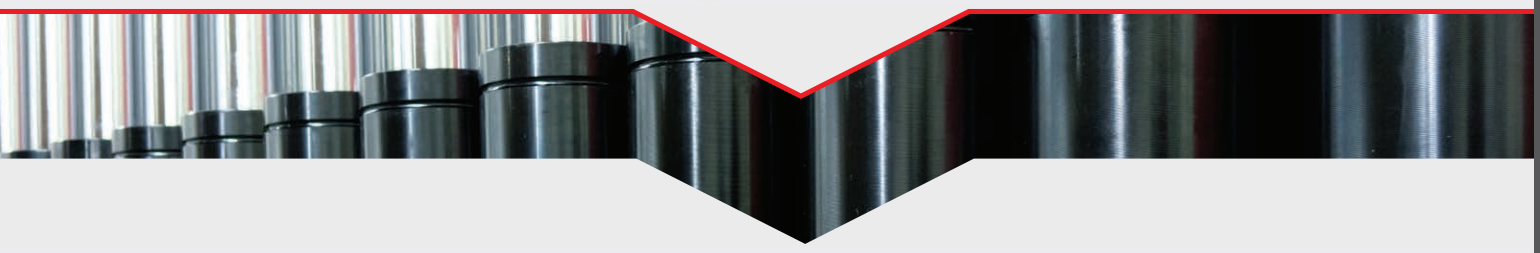

PROTECTION

CODE: SRS-75

MOUNTING EXAMPLES

(all dimensions are mm, unless otherwise stated)
for other possible mounting options see pages 91 - 94

4 X M10 Tapped Holes

Square Front Flange 120 SFF

Front Flange 120 FF

Square Flange 120 SF

Base Plate 120 BP

End Support 120 ES / 120 HM

Please note: gas springs should always be positively retained where possible. How to order: Spring Type x Stroke + Mounting Type ie: MX6600 x 025 + FF

7500 - 11800KG
16535 - 26015LBS

ISNG7500	PAGE 86	MX9500	PAGE 90
HDG075	PAGE 87	ISNG10000	PAGE 91
EX9500	PAGE 88	HDG118	PAGE 92
T-EX9500	PAGE 89		

ISNG7500-050 HDG075-050

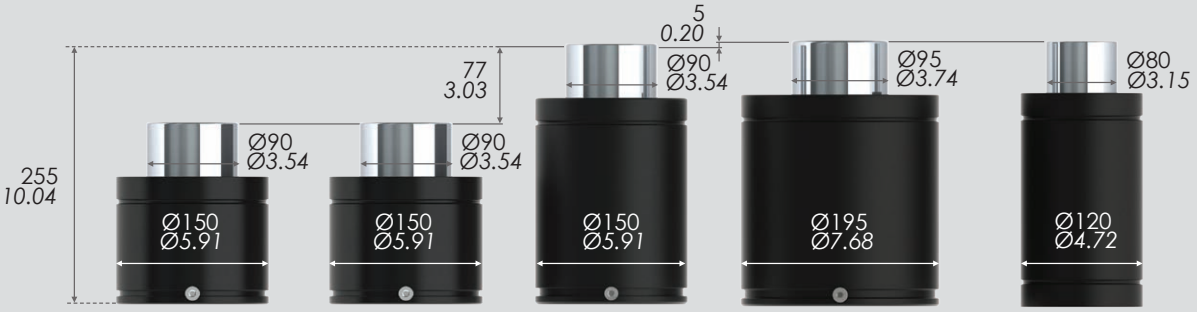

EX9500-050 T-EX9500-050 MX9500-050 ISNG10000-050 HDG118-050

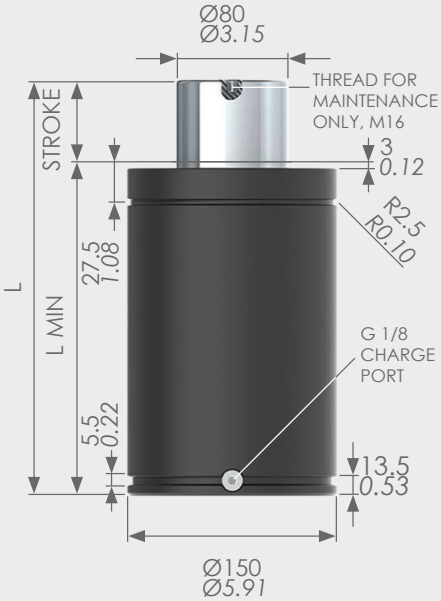

MODEL/STROKE	SPRING FORCE (daN)		L MIN (MM) *(in.)*	L (MM) *(in.)*	GAS VOL. (L)	WEIGHT (KG) *(lbs)*
	INITIAL (daN) *(lbs)*	MAXIMUM (daN) *(lbs)*				
ISNG7500-025	**7500** *16861*	**10500** *23605*	**180** *7.09*	**205** *8.07*	**0.51**	**19.82** *43.70*
ISNG7500-038		**11000** *24729*	**193.1** *7.60*	**231.2** *9.10*	**0.67**	**21.40** *47.18*
ISNG7500-050		**11300** *25403*	**205** *8.07*	**255** *10.04*	**0.81**	**21.80** *48.06*
ISNG7500-063		**11500** *25853*	**218.5** *8.60*	**282** *11.10*	**0.98**	**22.30** *49.16*
ISNG7500-080		**11700** *26303*	**235** *9.25*	**315** *12.40*	**1.18**	**23.30** *51.37*
ISNG7500-100		**11900** *26752*	**255** *10.04*	**355** *13.98*	**1.43**	**26.62** *58.69*
ISNG7500-125		**12100** *27202*	**280** *11.02*	**405** *15.94*	**1.74**	**27.20** *59.97*
ISNG7500-160		**12200** *27427*	**315** *12.40*	**475** *18.70*	**2.17**	**29.80** *65.70*
ISNG7500-200		**12300** *27652*	**355** *13.98*	**555** *21.85*	**2.66**	**31.10** *68.56*
ISNG7500-250		**12400** *27876*	**405** *15.94*	**655** *25.79*	**3.27**	**35.50** *78.26*
ISNG7500-300		**12400** *27876*	**455** *17.91*	**755** *29.72*	**3.88**	**42.90** *94.58*

SPECIAL STROKE SIZES AVAILABLE UPON REQUEST

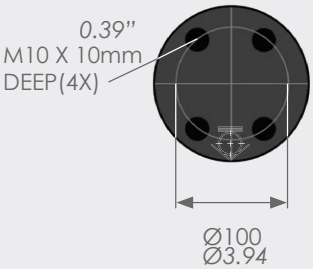

USE ONLY NITROGEN

MAX. PRESSURE:	MIN. PRESSURE:	MAX. PISTON VELOCITY:
150 BAR *2176 PSI*	**20 BAR** *290 PSI*	**1.6M/SEC** *5.25ft/SEC*

SERVICE KIT ISNG7500

ISO PED 2014/68/EU

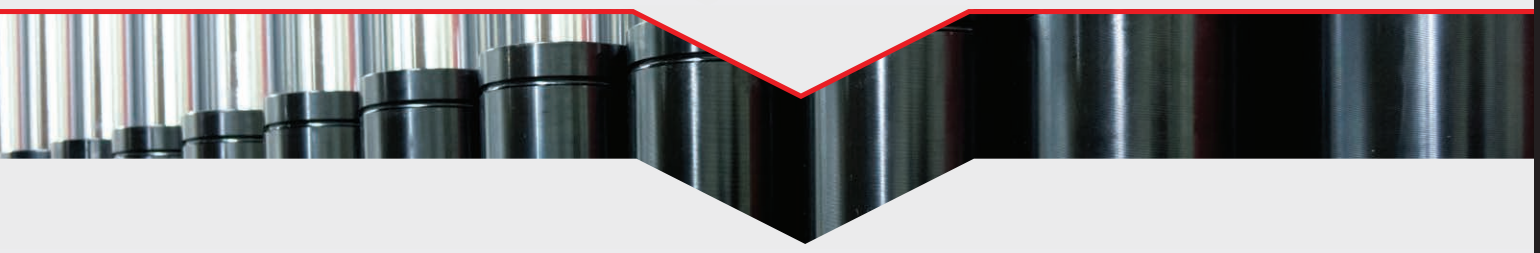

PROTECTION

CODE: SRS-80

MOUNTING EXAMPLES

(all dimensions are mm, unless otherwise stated)
for other possible mounting options see pages 91 - 94

4 X M10 Tapped Holes

Square Front Flange 150 SFF

Front Flange 150 FF

Square Flange 150 SF

Base Plate 150 BP

End Support 150 ES

Please note: gas springs should always be positively retained where possible. How to order: Spring Type x Stroke + Mounting Type ie: ISNG7500 x 025 + FF

MODEL/STROKE	SPRING FORCE (daN)		L MIN (MM) (in.)	L (MM) (in.)	GAS VOL. (L)	WEIGHT (KG) (lbs)
	INITIAL (daN) (lbs)	MAXIMUM (daN) (lbs)				
HDG075-10	**7500**	**9850**	**80**	**90**	**0.18**	**2.80**
	16861	*22144*	*3.15*	*3.54*		*6.17*
HDG075-16		**10000**	**100**	**116**	**0.30**	**3.30**
		22481	*3.94*	*4.57*		*7.28*
HDG075-25		**10400**	**120**	**145**	**0.41**	**3.70**
		23380	*4.72*	*5.71*		*8.16*
HDG075-32		**10200**	**150**	**182**	**0.57**	**4.40**
		22931	*5.91*	*7.17*		*9.70*
HDG075-40		**10400**	**170**	**210**	**0.68**	**4.80**
		23380	*6.69*	*8.27*		*10.58*
HDG075-50		**10300**	**205**	**255**	**0.87**	**5.60**
		23155	*8.07*	*10.04*		*12.35*
HDG075-65		**11100**	**214**	**279**	**1.00**	**6.60**
		24954	*8.43*	*10.98*		*14.55*

SPECIAL STROKE SIZES AVAILABLE UPON REQUEST

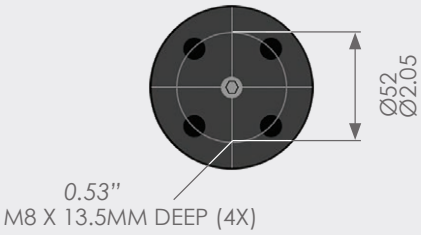

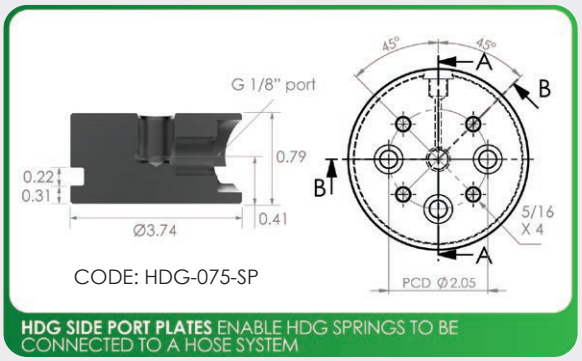

HOSE SYSTEMS AVAILABLE WITH SIDE PORT

USE ONLY NITROGEN

MAX. PRESSURE:	MIN. PRESSURE:	MAX. PISTON VELOCITY:
150 BAR *2176 PSI*	**25 BAR** *363 PSI*	**0.8M/SEC** *2.62ft/SEC*

SERVICE KIT HDG075

PED 2014/68/EU

MOUNTING EXAMPLES

(all dimensions are mm, unless otherwise stated) for other possible mounting options see pages 91 - 94

4 X M8 Tapped Holes

Square Front Flange 95 SFF

Front Flange 95 FF

HDG-075-SP + Square Flange 95 SF

Please note: gas springs should always be positively retained where possible. How to order: Spring Type x Stroke + Mounting Type ie: HDG075 x 10 + FF

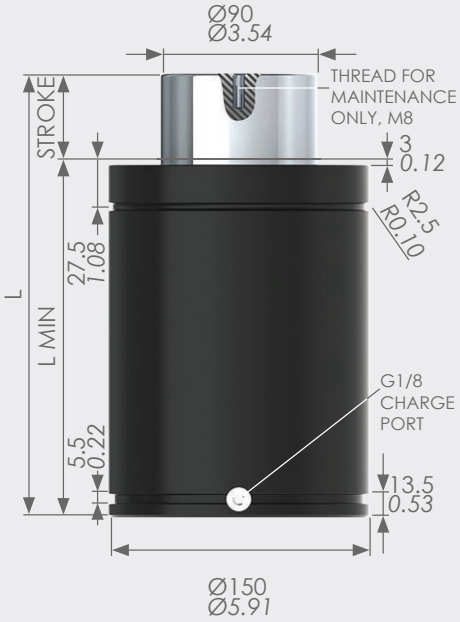

MODEL/STROKE	SPRING FORCE (daN) INITIAL (daN) *(lbs)*	SPRING FORCE (daN) MAXIMUM (daN) *(lbs)*	L MIN (MM) *(in.)*	L (MM) *(in.)*	GAS VOL. (L)	WEIGHT (KG) *(lbs)*
EX9500-019	**9500** *21357*	**13500** *30349*	**97** *3.82*	**116** *4.57*	**0.49**	**9.90** *21.83*
EX9500-025		**13900** *31248*	**103** *4.06*	**128** *5.04*	**0.58**	**10.27** *22.64*
EX9500-032		**14200** *31923*	**110** *4.33*	**142** *5.59*	**0.70**	**10.70** *23.59*
EX9500-038		**14300** *32148*	**116** *4.57*	**154** *6.06*	**0.80**	**11.10** *24.47*
EX9500-050		**14600** *32822*	**128** *5.04*	**178** *7.01*	**0.99**	**11.84** *26.10*
EX9500-063		**14800** *33272*	**141** *5.55*	**204** *8.03*	**1.20**	**12.76** *28.13*
EX9500-075		**14900** *33497*	**153** *6.02*	**228** *8.98*	**1.39**	**13.40** *29.54*
EX9500-080		**15000** *33721*	**158** *6.22*	**238** *9.37*	**1.47**	**13.93** *30.71*
EX9500-100		**15100** *33946*	**178** *7.01*	**278** *10.94*	**1.79**	**15.20** *33.51*
EX9500-125		**15200** *34171*	**203** *7.99*	**328** *12.91*	**2.20**	**17.00** *37.48*

SPECIAL STROKE SIZES AVAILABLE UPON REQUEST

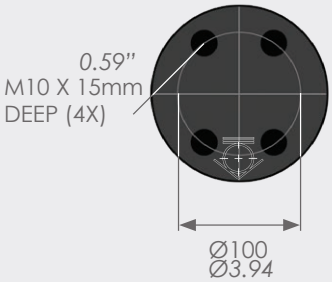

USE ONLY NITROGEN

MAX. PRESSURE:	MIN. PRESSURE:	MAX. PISTON VELOCITY:
150 BAR *2176 PSI*	**20 BAR** *290 PSI*	**1.6M/SEC** *5.25ft/SEC*

SERVICE KIT EX9500

ISO

PED 2014/68/EU

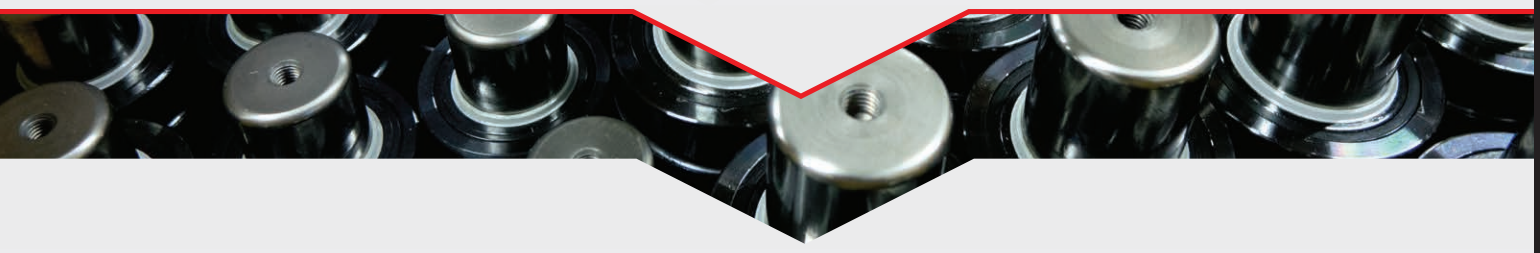

PROTECTION

CODE: SRS-90

MOUNTING EXAMPLES

(all dimensions are mm, unless otherwise stated)
for other possible mounting options see pages 91 - 94

4 X M10 Tapped Holes

Square Front Flange 150 SFF

Front Flange 150 FF

Square Flange 150 SF

Base Plate 150 BP

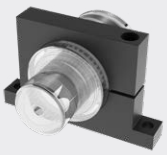

End Support 150 ES

Please note: gas springs should always be positively retained where possible. How to order: Spring Type x Stroke + Mounting Type ie: EX9500 x 019 + FF

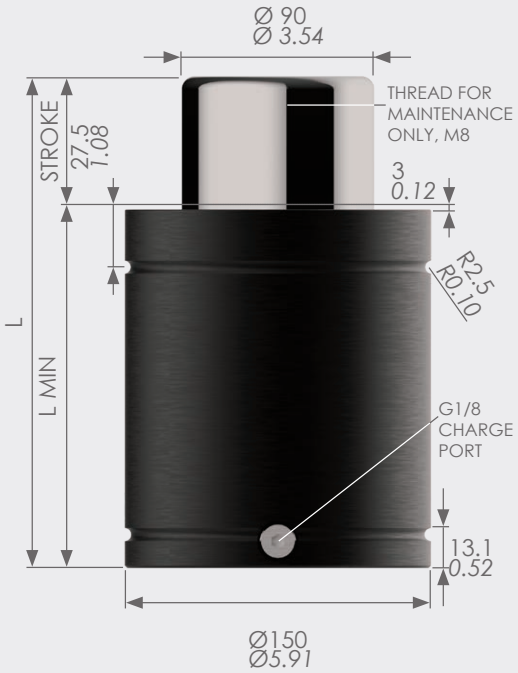

MODEL/STROKE	SPRING FORCE (daN) INITIAL (daN) *(lbs)*	SPRING FORCE (daN) MAXIMUM (daN) *(lbs)*	L MIN (MM) *(in.)*	L (MM) *(in.)*	GAS VOL. (L)	WEIGHT (KG) *(lbs)*
T-EX9500-019	**9500** *21357*	**13500** *30349*	**97** *3.82*	**116** *4.57*	**0.49**	**9.90** *21.83*
T-EX9500-025		**13900** *31248*	**103** *4.06*	**128** *5.04*	**0.58**	**10.27** *22.64*
T-EX9500-032		**14200** *31923*	**110** *4.33*	**142** *5.59*	**0.70**	**10.70** *23.59*
T-EX9500-038		**14300** *32148*	**116** *4.57*	**154** *6.06*	**0.80**	**11.10** *24.47*
T-EX9500-050		**14600** *32822*	**128** *5.04*	**178** *7.01*	**0.99**	**11.84** *26.10*
T-EX9500-063		**14800** *33272*	**141** *5.55*	**204** *8.03*	**1.20**	**12.76** *28.13*
T-EX9500-075		**14900** *33497*	**153** *6.02*	**228** *8.98*	**1.39**	**13.40** *29.54*
T-EX9500-080		**15000** *33721*	**158** *6.22*	**238** *9.37*	**1.47**	**13.93** *30.71*
T-EX9500-100		**15100** *33946*	**178** *7.01*	**278** *10.94*	**1.79**	**15.20** *33.51*
T-EX9500-125		**15200** *34171*	**203** *7.99*	**328** *12.91*	**2.20**	**17.00** *37.48*

SPECIAL STROKE SIZES AVAILABLE UPON REQUEST

USE ONLY NITROGEN

MAX. PRESSURE:	MIN. PRESSURE:	MAX. PISTON VELOCITY:
150 BAR *2176 PSI*	**20 BAR** *290 PSI*	**1.6M/SEC** *5.25ft/SEC*

SERVICE KIT T-EX9500

ISO

PED 2014/68/EU

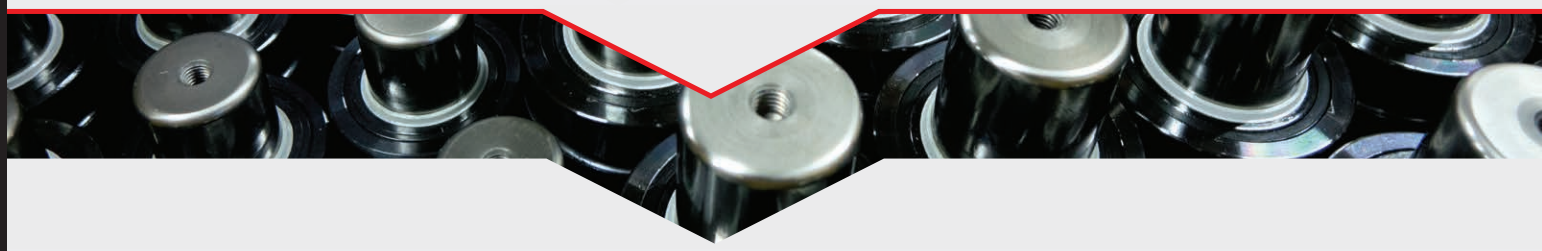

PROTECTION

CODE: SRS-90

MOUNTING EXAMPLES

(all dimensions are mm, unless otherwise stated)
for other possible mounting options see pages 91 - 94

4 X M10 Tapped Holes

Square Front Flange
150 SFF

Front Flange
150 FF

Lower Square Flange
150 LSF

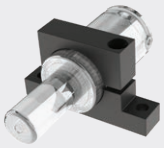

End Support
150 ES

Please note: gas springs should always be positively retained where possible. How to order: Spring Type x Stroke + Mounting Type ie: T-EX9500 x 019 + FF

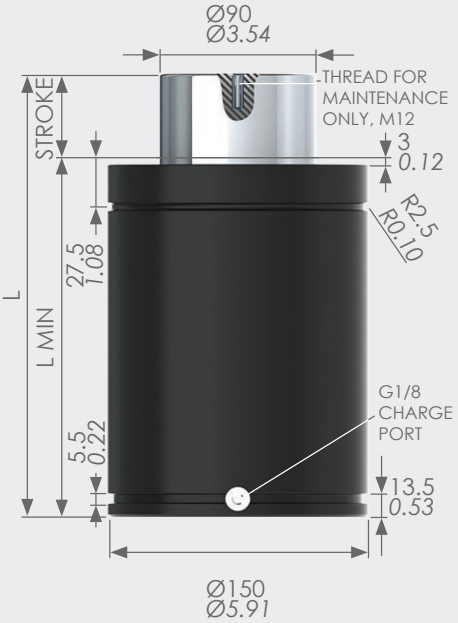

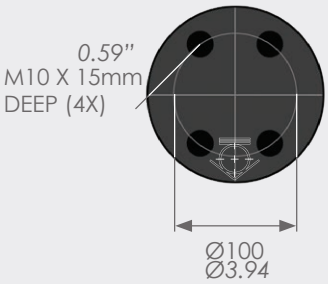

MODEL/STROKE	SPRING FORCE (daN) INITIAL (daN) *(lbs)*	SPRING FORCE (daN) MAXIMUM (daN) *(lbs)*	L MIN (MM) *(in.)*	L (MM) *(in.)*	GAS VOL. (L)	WEIGHT (KG) *(lbs)*
MX9500-025	**9500** *21357*	**11320** *25448*	**180** *7.09*	**205** *8.07*	**1.09**	**16.79** *37.02*
MX9500-038		**11900** *26752*	**193** *7.60*	**231** *9.09*	**1.30**	**17.70** *39.02*
MX9500-050		**12330** *27719*	**205** *8.07*	**255** *10.04*	**1.49**	**18.48** *40.74*
MX9500-063		**12700** *28551*	**218** *8.58*	**281** *11.06*	**1.69**	**19.32** *42.59*
MX9500-075		**12970** *29158*	**230** *9.06*	**305** *12.01*	**1.88**	**24.00** *52.91*
MX9500-080		**13080** *29405*	**235** *9.25*	**315** *12.40*	**1.96**	**24.40** *53.79*
MX9500-100		**13430** *30192*	**255** *10.04*	**355** *13.98*	**2.28**	**26.30** *57.98*
MX9500-125		**13760** *30934*	**280** *11.02*	**405** *15.94*	**2.67**	**26.62** *58.69*
MX9500-150		**14020** *31518*	**305** *12.01*	**455** *17.91*	**3.07**	**30.00** *66.14*
MX9500-160		**14100** *31698*	**315** *12.40*	**475** *18.70*	**3.23**	**31.00** *68.34*
MX9500-175		**14220** *31968*	**330** *12.99*	**505** *19.88*	**3.47**	**31.00** *68.34*
MX9500-200		**14380** *32328*	**355** *13.98*	**555** *21.85*	**3.86**	**33.00** *72.75*
MX9500-250		**14630** *32890*	**405** *15.94*	**655** *25.79*	**4.65**	**39.00** *85.98*
MX9500-300		**14820** *33317*	**455** *17.91*	**755** *29.72*	**5.44**	**45.00** *99.21*

SPECIAL STROKE SIZES AVAILABLE UPON REQUEST

USE ONLY NITROGEN

MAX. PRESSURE: **150 BAR** *2176 PSI*

MIN. PRESSURE: **20 BAR** *290 PSI*

MAX. PISTON VELOCITY: **1.6M/SEC** *5.25ft/SEC*

SERVICE KIT MX9500

ISO PED 2014/68/EU

PROTECTION

CODE: SRS-90

MOUNTING EXAMPLES

(all dimensions are mm, unless otherwise stated)
for other possible mounting options see pages 91 - 94

4 X M10 Tapped Holes

Square Front Flange 150 SFF

Front Flange 150 FF

Square Flange 150 SF

Base Plate 150 BP

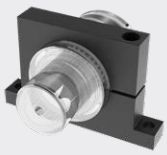

End Support 150 ES

Please note: gas springs should always be positively retained where possible. How to order: Spring Type x Stroke + Mounting Type ie: MX9500 x 25 + FF

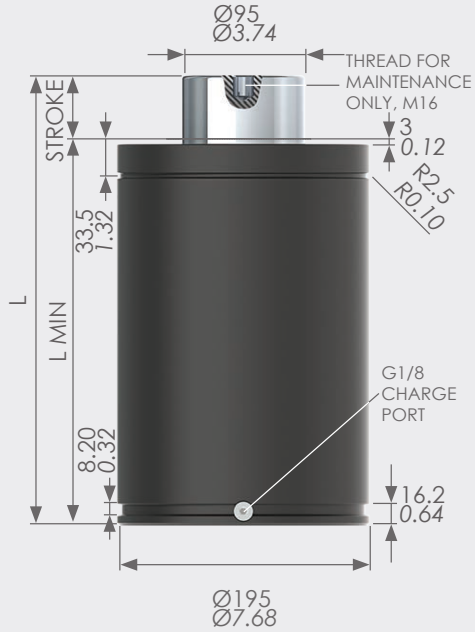

MODEL/STROKE	SPRING FORCE (daN)		L MIN (MM) (in.)	L (MM) (in.)	GAS VOL. (L)	WEIGHT (KG) (lbs)
	INITIAL (daN) (lbs)	MAXIMUM (daN) (lbs)				
ISNG10000-025	**10600** *23830*	**13800** *31024*	**185** *7.28*	**210** *8.27*	**0.87**	**35.90** *79.15*
ISNG10000-038		**14300** *32148*	**198.1** *7.80*	**236.2** *9.30*	**1.13**	**37.60** *82.89*
ISNG10000-050		**14700** *33047*	**210** *8.27*	**260** *10.24*	**1.37**	**38.00** *83.78*
ISNG10000-063		**15000** *33721*	**223.5** *8.80*	**287** *11.30*	**1.64**	**41.00** *90.39*
ISNG10000-080		**15200** *34171*	**240** *9.45*	**320** *12.60*	**1.98**	**42.00** *92.59*
ISNG10000-100		**15600** *35070*	**260** *10.24*	**360** *14.17*	**2.38**	**44.00** *97.00*
ISNG10000-125		**15700** *35295*	**285** *11.22*	**410** *16.14*	**2.88**	**46.50** *102.52*
ISNG10000-160		**15800** *35519*	**320** *12.60*	**480** *18.90*	**3.59**	**51.00** *112.54*
ISNG10000-200		**16000** *35969*	**360** *14.17*	**560** *22.05*	**4.39**	**60.00** *132.28*
ISNG10000-250		**16000** *35969*	**410** *16.14*	**660** *25.98*	**5.40**	**66.50** *146.61*
ISNG10000-300		**16000** *35969*	**460** *18.11*	**760** *29.92*	**6.40**	**68.00** *149.91*

SPECIAL STROKE SIZES AVAILABLE UPON REQUEST

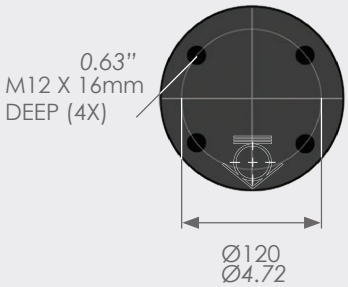

USE ONLY NITROGEN

MAX. PRESSURE:	MIN. PRESSURE:	MAX. PISTON VELOCITY:
150 BAR *2176 PSI*	**20 BAR** *290 PSI*	**1.6M/SEC** *5.25ft/SEC*

SERVICE KIT ISNG10000

ISO

PED 2014/68/EU

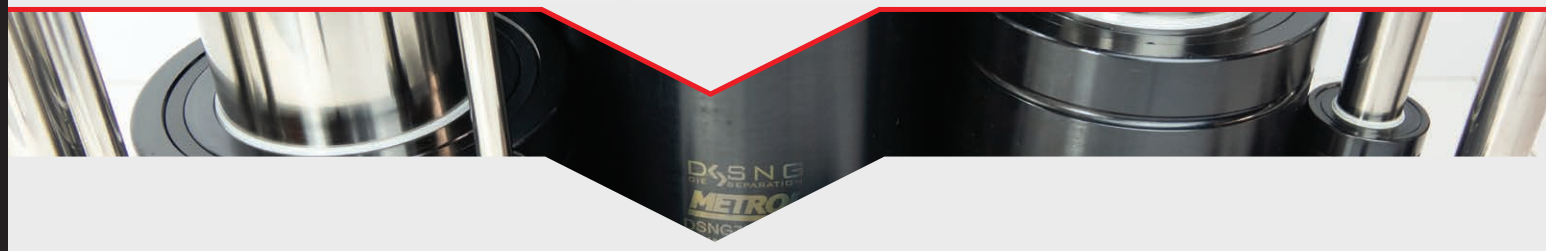

MOUNTING EXAMPLES

(all dimensions are mm, unless otherwise stated) for other possible mounting options see pages 91 - 94

4 X M12 Tapped Holes

Square Front Flange
195 SFF

Front Flange
195 FF

Square Flange
195 SF

Base Plate
195 BP

Please note: gas springs should always be positively retained where possible. How to order: Spring Type x Stroke + Mounting Type ie: ISNG10000 x 025 + FF

MODEL/STROKE	SPRING FORCE (daN) INITIAL (daN) *(lbs)*	SPRING FORCE (daN) MAXIMUM (daN) *(lbs)*	L MIN (MM) *(in.)*	L (MM) *(in.)*	GAS VOL. (L)	WEIGHT (KG) *(lbs)*
HDG118-10	**11800** *26527*	**15000** *33721*	**90** *3.54*	**100** *3.94*	**0.33**	**5.52** *12.17*
HDG118-16		**15300** *34396*	**110** *4.33*	**126** *4.96*	**0.50**	**5.92** *13.05*
HDG118-25		**16000** *35969*	**130** *5.12*	**155** *6.10*	**0.68**	**6.17** *13.60*
HDG118-32		**16500** *37093*	**155** *6.10*	**187** *7.36*	**0.88**	**6.90** *15.21*
HDG118-40		**16000** *35969*	**180** *7.09*	**220** *8.66*	**1.00**	**7.65** *16.87*
HDG118-50		**16100** *36194*	**210** *8.27*	**260** *10.24*	**1.35**	**8.55** *18.85*
HDG118-65		**16300** *36644*	**255** *10.04*	**320** *12.60*	**1.90**	**9.56** *21.08*

SPECIAL STROKE SIZES AVAILABLE UPON REQUEST

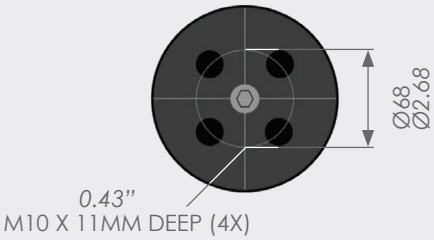

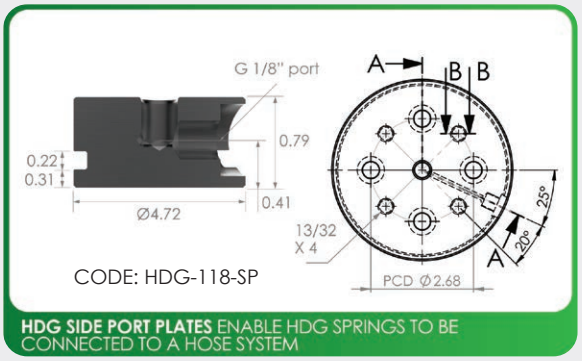

HDG SIDE PORT PLATES ENABLE HDG SPRINGS TO BE CONNECTED TO A HOSE SYSTEM

HOSE SYSTEMS AVAILABLE WITH SIDE PORT

USE ONLY NITROGEN

MAX. PRESSURE:	MIN. PRESSURE:	MAX. PISTON VELOCITY:
150 BAR *2176 PSI*	**25 BAR** *363 PSI*	**0.8M/SEC** *2.62ft/SEC*

SERVICE KIT HDG118

PED 2014/68/EU

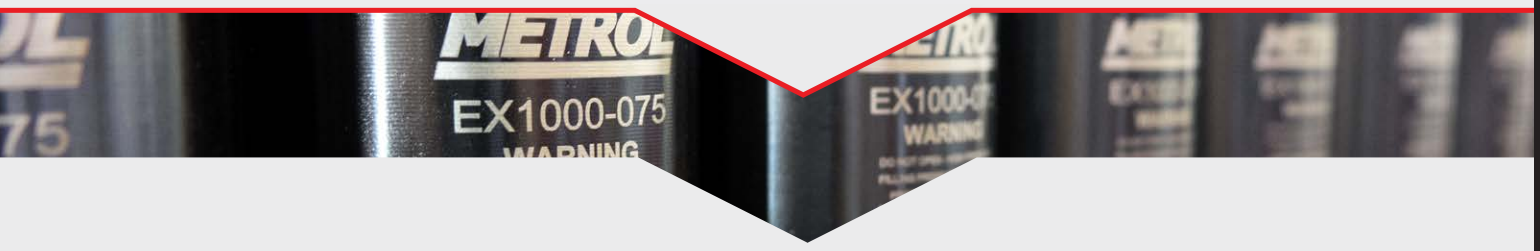

MOUNTING EXAMPLES

(all dimensions are mm, unless otherwise stated) for other possible mounting options see pages 91 - 94

4 X M10 Tapped Holes

Square Front Flange 120 SFF

Front Flange 120 FF

HDG-118-SP + Square Flange 120 SF

Please note: gas springs should always be positively retained where possible. How to order: Spring Type x Stroke + Mounting Type ie: HDG118 x 10 + FF

GAS SPRING ACCESSORIES

SECONDARY ROD SCRAPERS	PAGE 94
FASTENING ACCESSORIES	PAGE 95 - 98
THRUST PLATES	PAGE 99

ENHANCED PROTECTION
FOR EXTREME CONDITIONS

- Die modification **not required**
- **Minimal reduction** in stroke length when fitted
- **Available** with Front Flange assemblies
- **Can be** retrofitted to most Metrol gas springs
- **Easily** removed for gas spring overhaul and maintenance

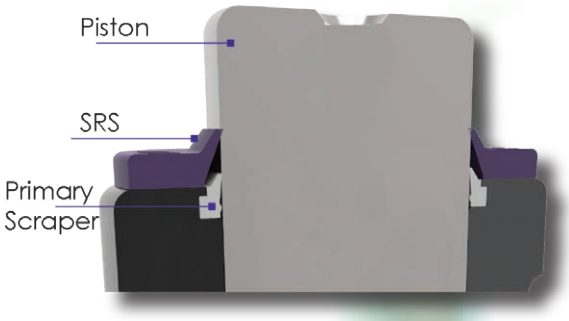

PART NO.	ROD DIAMETER (mm) *(in.)*	SRS HEIGHT (mm) *(in.)*	MINI SPRINGS	EX	G-EX	ISNG	MX	PLJ / PL	DSNG
SRS-6	6mm *0.236*	3mm *0.125*	MS-12	-	-	-	-	-	-
SRS-7	7mm *0.276*	3mm *0.125*	MS-15	-	-	-	-	-	-
SRS-8	8mm *0.31*	3mm *0.12*	NG0	-	-	-	-	-	-
SRS-11	11mm *0.43*	3mm *0.12*	-	EX0170	-	-	-	-	-
SRS-12	12mm *0.47*	3mm *0.12*	NG1	-	-	-	-	-	-
SRS-15	15mm *0.59*	3mm *0.12*	-	EX0320	-	-	-	-	-
SRS-16	16mm *0.63*	6mm *0.24*	-	EX0360	G-EX0360	-	-	-	-
SRS-16-A	16mm *0.63*	6mm *0.24*	-	-	-	-	-	PLJ0300 / PL0300	-
SRS-20	20mm *0.79*	6mm *0.24*	-	EX0500	G-EX0500	-	-	-	-
SRS-20-A	20mm *0.79*	6mm *0.24*	-	-	-	ISNG0500	-	PLJ0500 / PL0500	-
SRS-25	25mm *0.98*	6mm *0.24*	-	EX0750	G-EX0750	-	-	-	-
SRS-25-A	25mm *0.98*	6mm *0.24*	-	-	-	ISNG0750	-	PLJ0750 / PL0750	-
SRS-28	28mm *1.10*	6mm *0.24*	-	EX1000	G-EX1000	-	MX1000	-	-
SRS-36	36mm *1.42*	6.5mm *0.26*	-	EX1500	G-EX1500	-	-	-	-
SRS-36-A	36mm *1.42*	6.5mm *0.26*	-	-	-	ISNG1500	-	-	DSNG1500
SRS-45	45mm *1.77*	7mm *0.28*	-	EX2400	G-EX2400	-	MX2400	-	-
SRS-50	50mm *1.97*	7mm *0.28*	-	-	-	ISNG3000	-	-	DSNG3000
SRS-60	60mm *2.36*	7mm *0.28*	-	EX4200	G-EX4200	-	MX4200	-	-
SRS-65	65mm *2.56*	7mm *0.28*	-	-	-	ISNG5000	-	-	DSNG5000
SRS-75	75mm *2.95*	7mm *0.28*	-	EX6600	G-EX6600	-	MX6600	-	-
SRS-80	80mm *3.15*	7mm *0.28*	-	-	-	ISNG7500	-	-	DSNG7500
SRS-90	90mm *3.54*	9mm *0.35*	-	EX9500	-	-	MX9500	-	-

FRONT FLANGE 12FF

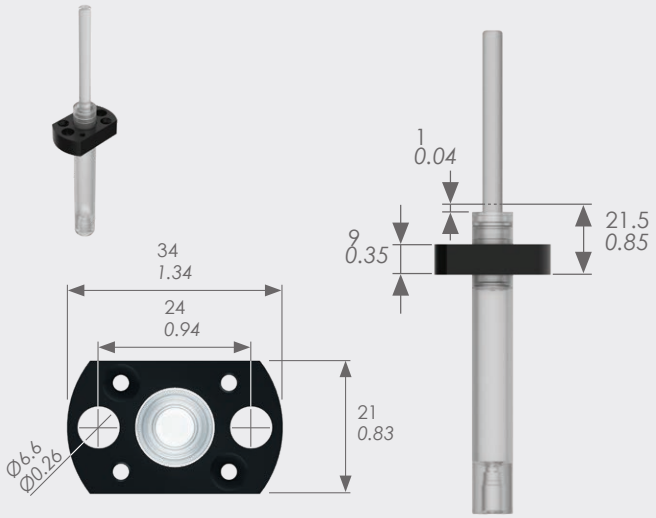

FRONT FLANGE 15FF

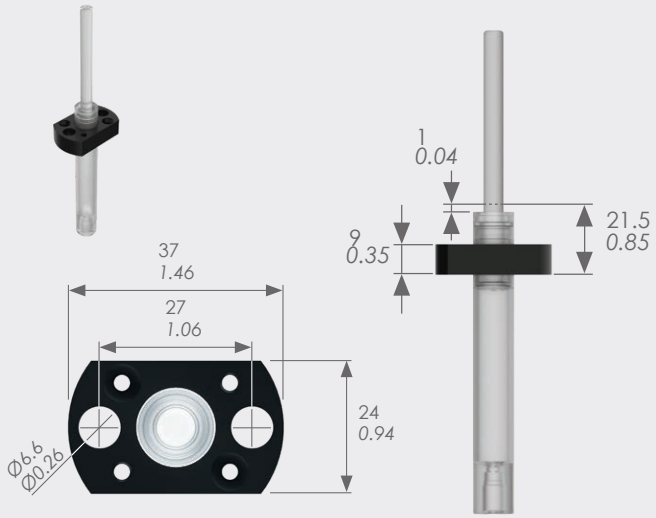

FRONT FLANGE 19FF

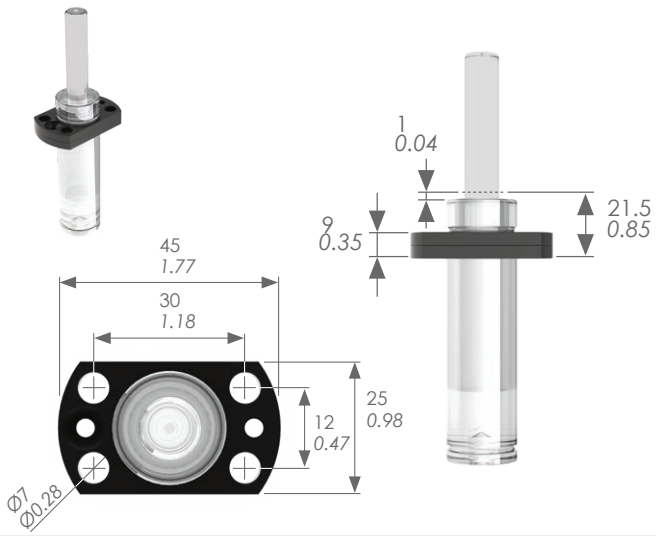

FRONT FLANGE 25FF

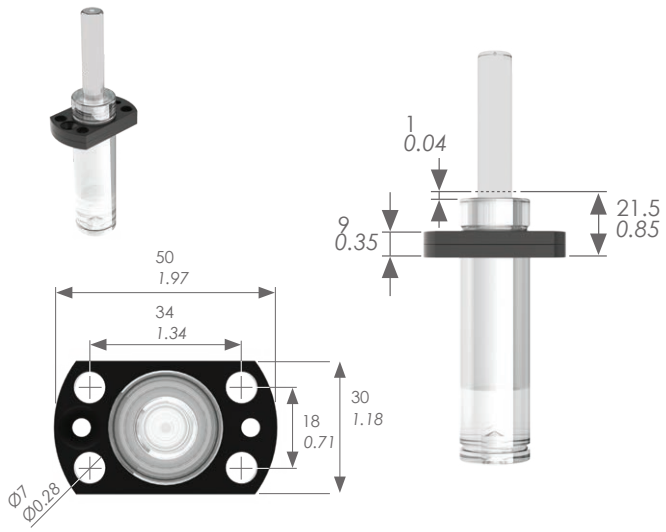

END SUPPORT-25ES

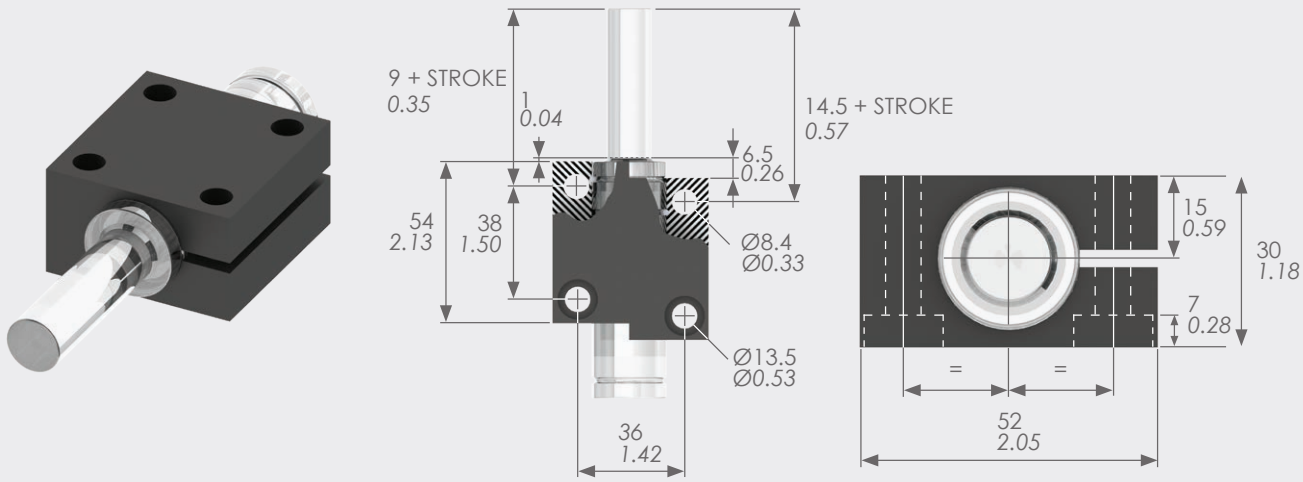

FRONT FLANGE (FF)

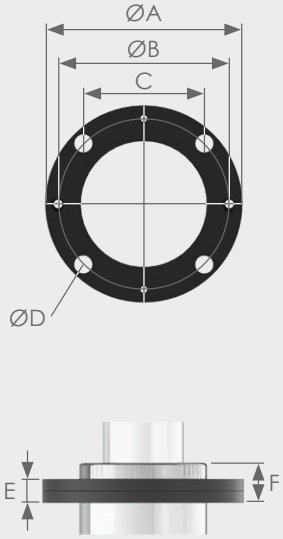

FF-TYPE	ØA	ØB	C	ØD	E	F
19 FF	For Full Dimensions, See Page 91					
25 FF	For Full Dimensions, See Page 91					
32 FF	60 2.36	49.5 1.95	35 1.38	7 0.28	9 0.35	15 0.59
38 FF	68 2.68	56.5 2.22	40 1.57	7 0.28	9 0.35	15 0.59
45 FF	86 3.39	70.7 2.78	50 1.97	9 0.35	13 0.51	21 0.83
50 FF	95 3.74	80 3.15	56.5 2.22	9 0.35	13 0.51	21 0.83
63 FF	122 4.80	104 4.09	73.5 2.89	11 0.43	16 0.63	26 1.02
75 FF	122 4.80	104 4.09	73.5 2.89	11 0.43	16 0.63	26 1.02
95 FF	150 5.91	130 5.12	92 3.62	13.5 0.53	18 0.71	30 1.18
120 FF	175 6.89	155 6.10	109.5 4.31	13.5 0.53	21 0.83	33 1.30
150 FF	220 8.66	195 7.68	138 5.43	17.5 0.69	27 1.06	38 1.50

SQUARE FRONT FLANGE (SFF)

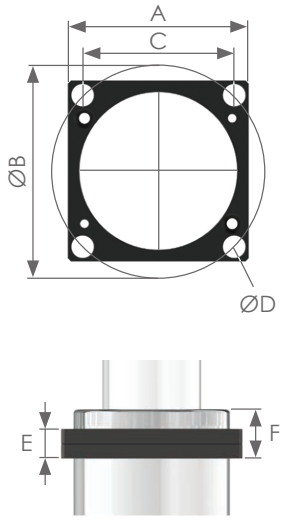

SFF-TYPE	ØA	ØB	C	ØD	E	F
32 SFF	45 1.77	49.5 1.95	35 1.38	7 0.28	9 0.35	15 0.59
38 SFF	52 2.05	56.5 2.22	40 1.57	7 0.28	9 0.35	15 0.59
45 SFF	64 2.52	70.7 2.78	50 1.97	9 0.35	13 0.51	21 0.83
50 SFF	70 2.76	80 3.15	56.5 2.22	9 0.35	13 0.51	21 0.83
63 SFF-A	80 3.15	90.5 3.56	64 2.52	11 0.43	16 0.63	24 0.94
63 SFF	90 3.54	104 4.09	73.5 2.89	11 0.43	16 0.63	24 0.94
75 SFF	90 3.54	104 4.09	73.5 2.89	11 0.43	16 0.63	26 1.02
95 SFF	110 4.33	130 5.12	92 3.62	13.5 0.53	18 0.71	30 1.18
120 SFF	130 5.12	155 6.10	109.5 4.31	13.5 0.53	21 0.83	33 1.30
150 SFF	162 6.38	195 7.68	138 5.43	17.5 0.69	27 1.06	38 1.50
195 SFF	210 8.27	240.4 9.46	170 6.69	17.5 0.69	27 1.06	43 1.69

END SUPPORT (ES)

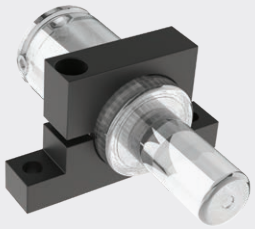

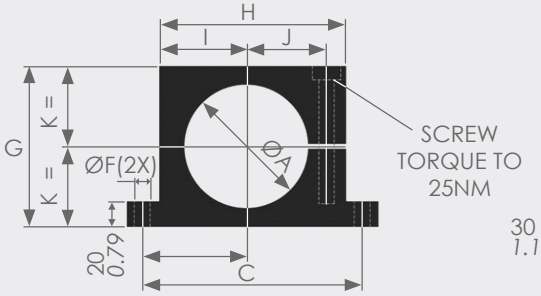

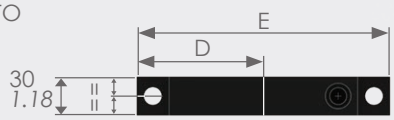

ES-TYPE	ØA	C	D	E	ØF	G	H	I	ØSCREW	J	K
25 ES	24.9 0.98	36 1.42	26 1.02	52 2.05	8.4 0.33	30 1.18	52 2.05	26 1.2	-	18 0.71	14.5 0.57
38 ES	38 1.50	77 3.03	43 1.69	95 3.74	9 0.35	55 2.17	59 2.32	25 0.98	M6	25 0.98	27.5 1.08
45 ES	45 1.77	82 3.23	46 1.81	100 3.94	9 0.35	60 2.36	66 2.60	29 1.14	M8	29 1.14	30 1.18
50 ES	50 1.97	110 4.33	60 2.36	130 5.12	9 0.35	80 3.15	90 3.54	40 1.57	M8	37.5 1.48	40 1.57
75 ES	75 2.95	137 5.39	75 2.95	160 6.30	11 0.43	105 4.13	115 4.53	52.5 2.07	M10	50 1.97	52.5 2.07
95 ES	95 3.74	170 6.69	92.5 3.64	195 7.68	13 0.51	125 4.92	145 5.71	67.5 2.66	M12	62.5 2.46	62.5 2.46
120 ES	120 4.72	195 7.68	105 4.13	220 8.66	13.5 0.53	148 5.83	165 6.50	77.5 3.05	M12	76.2 3.00	74 2.91
150 ES	150 5.91	230 9.06	125 4.92	260 10.24	13.5 0.53	200 7.87	200 7.87	95 3.74	M14	90 3.54	100 3.94

SQUARE FLANGE (SF)

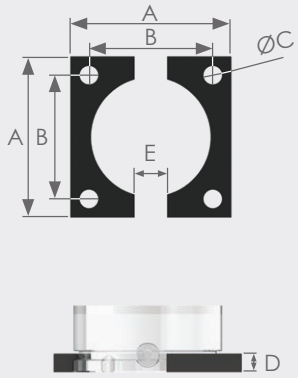

SF-TYPE	A	B	ØC	D	E
32 SF	50 1.97	35 1.38	7 0.28	7 0.28	12 0.47
38 SF	55 2.17	40 1.57	7 0.28	7 0.28	12 0.47
45 SF	70 2.76	50 1.97	9 0.35	7 0.28	20 0.79
50 SF	75 2.95	56.5 2.22	9 0.35	12 0.47	24 0.94
63 SF	100 3.94	73.5 2.89	11 0.43	12 0.47	24 0.94
75 SF	100 3.94	73.5 2.89	11 0.43	12 0.47	24 0.94
95 SF	120 4.72	92 3.62	13.5 0.53	12 0.47	24 0.94
120 SF	140 5.51	109.5 4.31	13.5 0.53	12 0.47	24 0.94
150 SF	190 7.48	138 5.43	17.5 0.69	12 0.47	24 0.94
195 SF	210 8.27	170 6.69	17.5 0.69	13 0.51	24 0.94

LOWER SQUARE FLANGE (LSF)

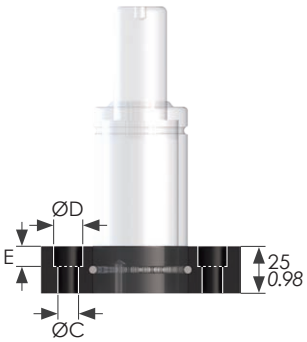

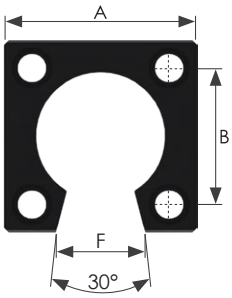

LSF-TYPE	A	B	ØC	ØD	E	F
50 LSF	76.2 3.00	53.9 2.12	11 0.43	17 0.67	11 0.43	35 1.38
75 LSF	101.6 4.00	76.2 3.00	13 0.51	20 0.79	13 0.51	49 1.93
95 LSF	127 5.00	98.3 3.87	13.5 0.53	20 0.79	13 0.51	61 2.40
120 LSF	139.7 5.50	114.3 4.50	13.5 0.53	20 0.79	13 0.51	71 2.80
150 LSF	177.8 7.00	139.7 5.50	18 0.71	26 1.02	17 0.67	88 3.46

BASE PLATE (BP)

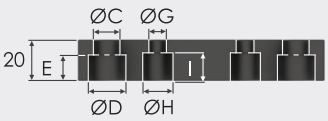

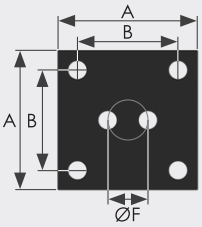

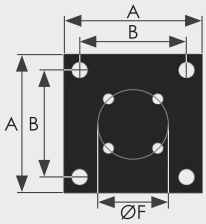

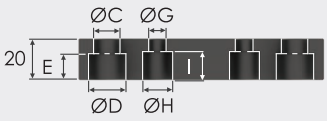

BASE PLATES FOR BASES WITH 2 CENTRAL FIXING HOLES

TYPE	A	B	ØC	ØD	E	ØF	ØG	ØH	I
45 BP	70 2.76	50 1.97	9 0.35	15 0.59	12 0.47	20 0.79	9 0.35	15 0.59	12 0.47
50 BP	75 2.95	56.5 2.22	9 0.35	15 0.59	12 0.47	20 0.79	9 0.35	15 0.59	14 0.55
63 BP	100 3.94	73.5 2.89	11 0.43	18 0.71	12 0.47	20 0.79	9 0.35	15 0.59	12 0.47

BASE PLATES FOR BASES WITH 4 CENTRAL FIXING HOLES

TYPE	A	B	ØC	ØD	E	ØF	ØG	ØH	I
75 BP	100 3.94	73.5 2.89	11 0.43	18 0.71	12 0.47	40 1.57	9 0.35	15 0.59	14 0.55
95 BP	120 4.72	92 3.62	13.5 0.53	19 0.75	13 0.51	60 2.36	9 0.35	15 0.59	14 0.55
120 BP	140 5.51	109.5 4.31	13.5 0.53	20 0.79	15 0.59	80 3.15	11 0.43	18 0.71	15 0.59
150 BP	190 7.48	138 5.43	17.5 0.69	26 1.02	17 0.67	100 3.94	11 0.43	18 0.71	15 0.59
195 BP	209 8.23	170 6.69	17.5 0.69	26 1.02	17 0.67	120 4.72	13.5 0.53	20 0.79	13 0.51

FOOT (F)

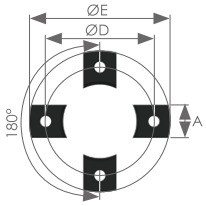

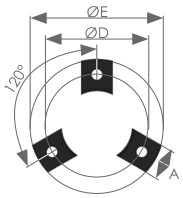

F-TYPE	A	B	C	D	E
45 F	25 0.98	7 0.28	9 0.35	70.7 2.78	95.8 3.77
50 F	30 1.18	12 0.47	9 0.35	80 3.15	110 4.33
75 F	30 1.18	12 0.47	11 0.43	104 4.09	134 5.28
95 F	40 1.57	12 0.47	13 0.51	130 5.12	170 6.69
120 F	50 1.97	12 0.47	13 0.51	155 6.10	195 7.68
150 F	60 2.36	12 0.47	17 0.67	184 7.24	220 8.66

The horizontal mount (HM/HMS) conforms to the Ford WDX35-62 standard and is available as a kit (Horizontal mount and support) or as a single part (Horizontal mount).

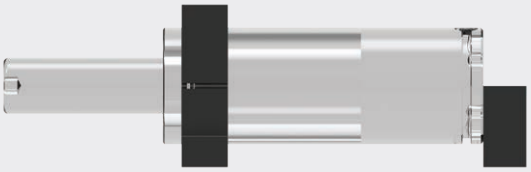

HORIZONTAL MOUNT AND SUPPORT KIT (HMS)

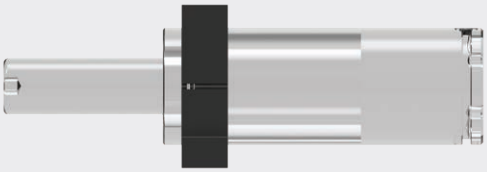

HORIZONTAL MOUNT (HM)

MOUNT

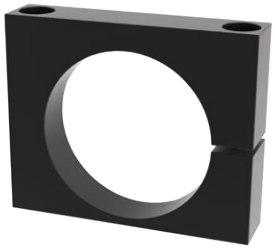

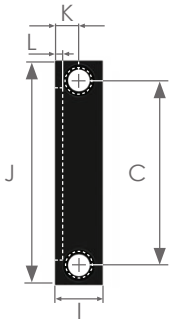

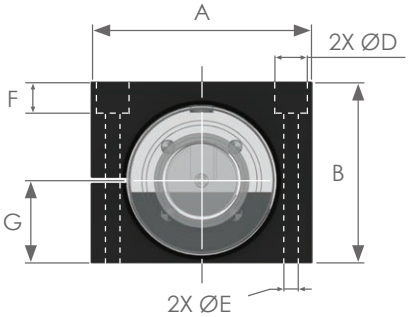

ORDERING CODE EXAMPLE

38HM

RANGE TYPE	A	B	C	ØD	ØE	F	G	I	J	K	L
38HM	**74** *2.91*	**54** *2.13*	**54** *2.13*	**15** *0.59*	**9** *0.35*	**16** *0.63*	**23.9** *0.94*	**20** *0.79*	**54** *2.13*	**10** *0.39*	**3** *0.12*
50HM	**90** *3.54*	**70** *2.76*	**68** *2.68*	**18** *0.71*	**11** *0.43*	**25** *0.98*	**30** *1.18*	**30** *1.18*	**68** *2.68*	**15** *0.59*	**4.5** *0.18*
75HM	**125** *4.92*	**94** *3.70*	**100** *3.94*	**20** *0.79*	**13.5** *0.53*	**19** *0.75*	**42** *1.65*	**30** *1.18*	**100** *3.94*	**15** *0.59*	**6** *0.24*
95HM	**140** *5.51*	**115** *4.53*	**115** *4.53*	**20** *0.79*	**13.5** *0.53*	**40** *1.57*	**52.5** *2.07*	**30** *1.18*	**115** *4.53*	**15** *0.59*	**6** *0.24*

SUPPORT

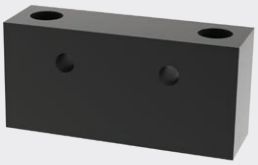

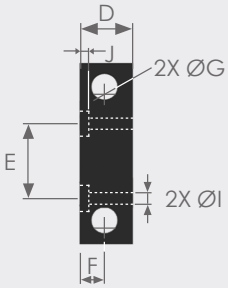

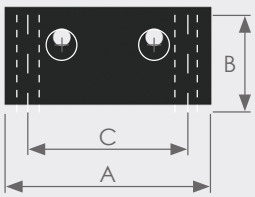

ORDERING CODE EXAMPLE

38HMS

RANGE TYPE	A	B	C	D	E	F	ØG	ØI	J
38HMS	**60** *2.36*	**38** *1.50*	**40** *1.57*	**28** *1.10*	**18** *0.71*	**16** *0.63*	**9** *0.35*	**6** *0.24*	**4** *0.16*
50HMS	**65** *2.56*	**45** *1.77*	**44** *1.73*	**28** *1.10*	**20** *0.79*	**15** *0.59*	**11** *0.43*	**8** *0.31*	**5** *0.20*
75HMS	**80** *3.15*	**45** *1.77*	**57** *2.24*	**28** *1.10*	**21.3** *0.84*	**16** *0.63*	**13.5** *0.53*	**8** *0.31*	**5** *0.20*
95HMS	**95** *3.74*	**45** *1.77*	**70** *2.76*	**28** *1.10*	**42.4** *1.67*	**13** *0.51*	**13.5** *0.53*	**8** *0.31*	**5** *0.20*

Thrust plates protect against damage to the piston top and the tool contact area. Damage can introduce side loading, reducing the life of the gas spring.

Material:
Tool Steel DIN 90MnCrV8 (1.2842),
hardened 55 - 60 HRc

ORDER NO.	MAX. PISTON ROD DIAMETER	A	C	D	D1	E	T
TP15	15 0.59	40 1.57	15 0.59	9 0.35	15 0.59	21 0.83	10 0.39
TP15-2	15 0.59	40 1.57	15 0.59	7 0.28	11 0.43	24 0.94	7 0.28
TP25	25 0.98	56 2.20	20 0.79	11 0.43	18 0.71	32 1.26	13 0.51
TP50	50 1.97	71 2.80	20 0.79	11 0.43	18 0.71	48 1.89	13 0.51
TP50-2	50 1.97	70 2.76	15 0.59	9 0.35	15 0.59	50 1.97	9 0.35
TP65	65 2.56	90 3.54	12 0.47	9 0.35	15 0.59	64 2.52	9 0.35
TP80	80 3.15	90 3.54	20 0.79	11 0.43	18 0.71	67 2.64	13 0.51
TP80-2	80 3.15	90 3.54	15 0.59	9 0.35	15 0.59	70 2.76	9 0.35
TP95	95 3.74	140 5.51	20 0.79	11 0.43	18 0.71	110 4.33	13 0.51

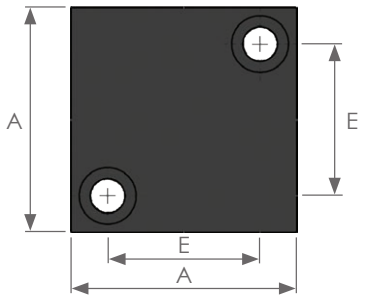

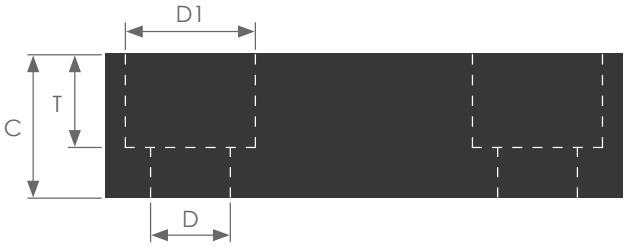

ORDER NO.	MAX. PISTON ROD DIAMETER	A	B	C	D	D1	E	E1	T
TPR15	15 0.59	50 1.97	25 0.98	12 0.47	7 0.28	11 0.43	32 1.26	8 0.31	7 0.28
TPR20	20 0.79	55 2.17	30 1.18	12 0.47	7 0.28	11 0.43	40 1.57	14 0.55	7 0.28
TPR25	25 0.98	70 2.76	35 1.38	15 0.59	9 0.35	15 0.59	48 1.89	14 0.55	9 0.35
TPR36	36 1.42	75 2.95	50 1.97	15 0.59	9 0.35	15 0.59	56 2.20	30 1.18	9 0.35
TPR50	50 1.97	85 3.35	60 2.36	15 0.59	9 0.35	15 0.59	66 2.60	40 1.57	9 0.35
TPR65	65 2.56	100 3.94	80 3.15	20 0.79	11 0.43	18 0.71	72 2.83	56 2.20	11 0.43
TPR80	80 3.15	110 4.33	100 3.94	20 0.79	11 0.43	18 0.71	85 3.35	75 2.95	11 0.43

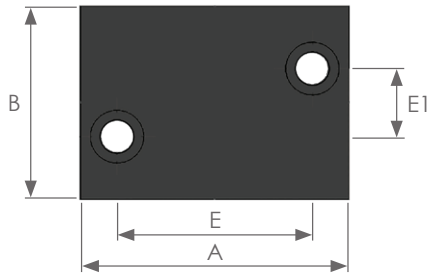

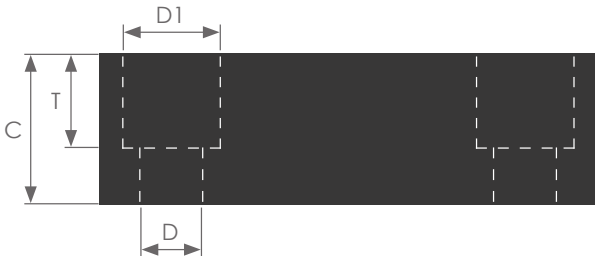

HOSE SYSTEMS

CONTROL PANELS	PAGE 101 - 102
MULTIPLE ADAPTORS	PAGE 103
DIGITAL PRESSURE SWITCH MONITOR	PAGE 103
CNOMO SYSTEM INTRODUCTION	PAGE 104
CNOMO HOSES	PAGE 105
CNOMO ADAPTORS	PAGE 102 - 109
CNOMO HOSE SYSTEM EXAMPLES	PAGE 110
MICRO SYSTEM INTRODUCTION	PAGE 111
MICRO HOSES	PAGE 112
MICRO ADAPTORS	PAGE 112 - 117
MICRO HOSE SYSTEM EXAMPLES	PAGE 118
S24 SYSTEM INTRODUCTION	PAGE 119
S24 HOSES	PAGE 120 - 121
S24 HOSE ENDS	PAGE 122
S24 ADAPTORS	PAGE 123 - 125
S24 HOSE SYSTEM EXAMPLE	PAGE 126
HOSE MAKING ACCESSORIES	PAGE 127
DO'S & DONT'S	PAGE 128
EXPANSION TANKS	PAGE 129

MET 111 - MINI CONTROL PANEL

- MET 111-RP - WITH RUPTURE PLUG

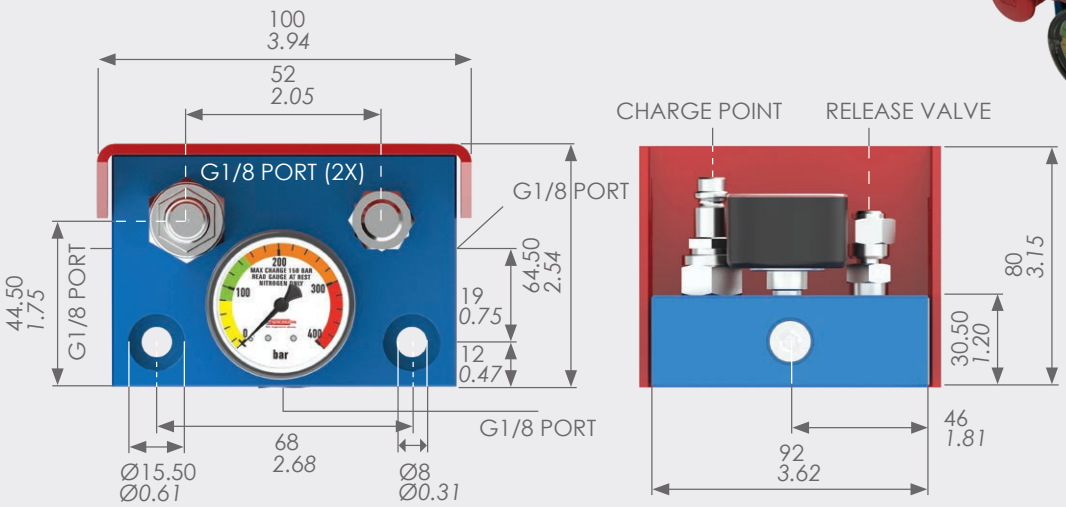

MET 222 - STANDARD CONTROL PANEL

- MET 222-RP - WITH RUPTURE PLUG

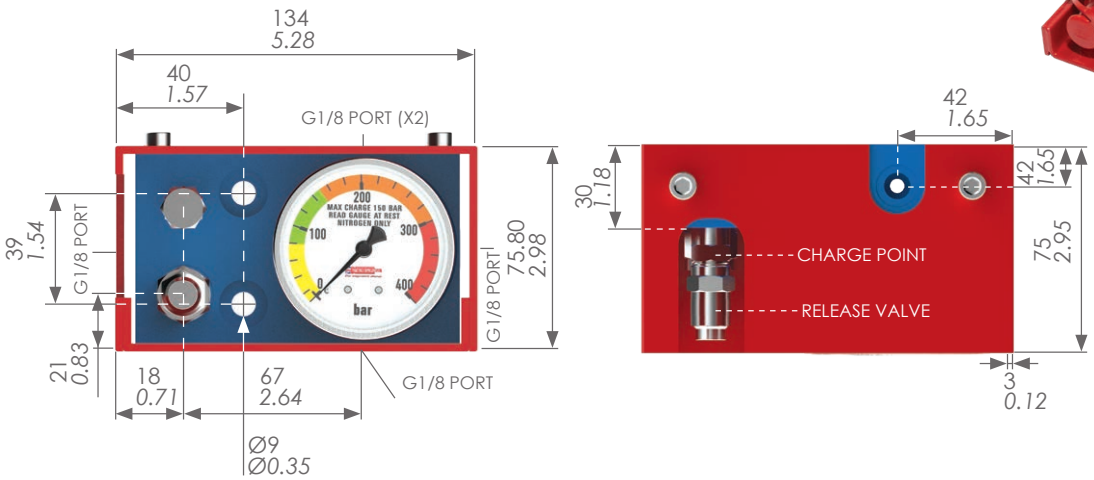

RUPTURE PLUG (RP)

The Rupture Plug (RP) is compatible with MET111, MET222 and the full range of MCP Control Panels. It can be used in any of the G1/8 ports located on the control panels.

ORDERING EXAMPLES (WITH RUPTURE PLUG)

- MET111-RP
- MET222-RP
- MCP-2-RP

INDIVIDUAL ORDERING CODE

MET 8103

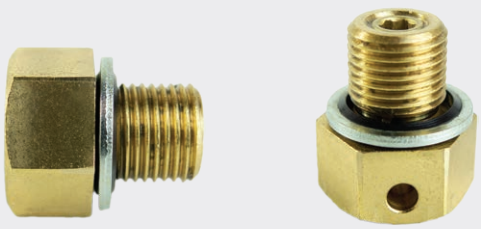

RUPTURE PLUG (RP)

MCP - MULTIPLE CONTROL PANEL

The MCP allows the connection of multiple systems to one control panel. Each system has a pressure gauge, which allows constant monitoring. By opening the shut-off valve, the operator has access to charge and de-gas the system as required.

Each system has three connection points using the G⅛ ports on top of the panel, and two with rear entry. The MCP is compatible with all types of hose systems.

Where multiple systems are used on a tool, the MCP design provides a compact, cost effective solution.

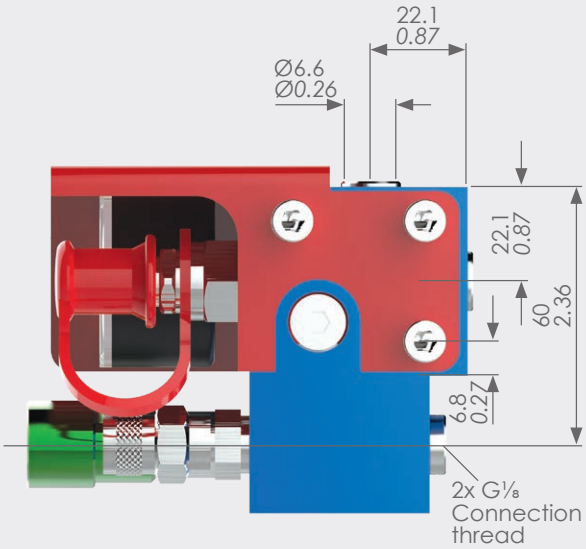

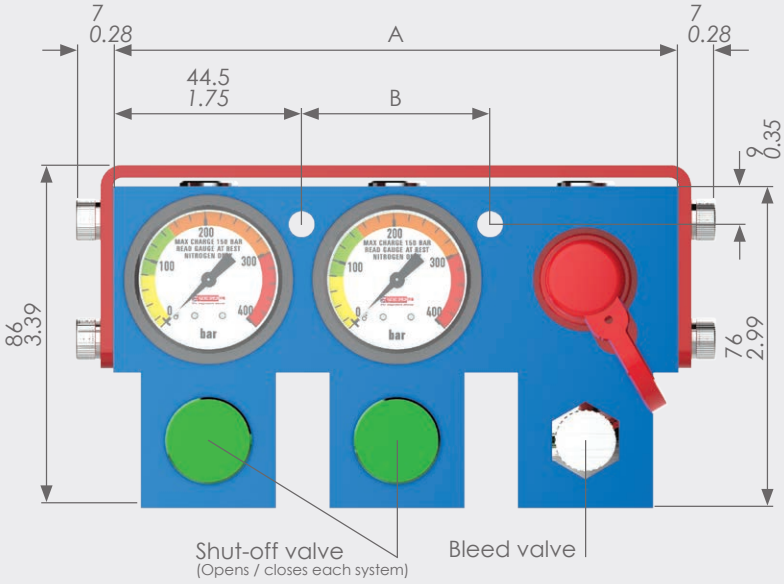

PART NO.	NO. OF SYSTEMS	A	B
MCP-2	2	**133.5** *5.26*	**44.5** *1.75*
MCP-3	3	**178** *7.01*	**89** *3.50*
MCP-4	4	**222.5** *8.76*	**133.5** *5.26*
MCP-5	5	**267** *10.51*	**178** *7.01*
MCP-6	6	**311.5** *12.26*	**222.5** *8.76*
MCP-8	8	**400.5** *15.77*	**311.5** *12.26*
MCP-10	10	**489.5** *19.27*	**400.5** *15.77*

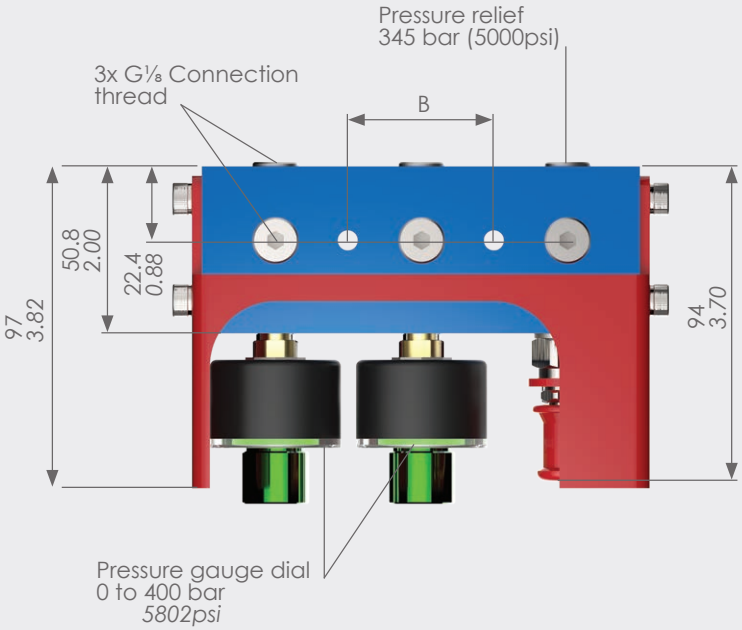

ORDERING EXAMPLE

- MCP-2-RP

MET 1060 - 14 WAY ADAPTOR

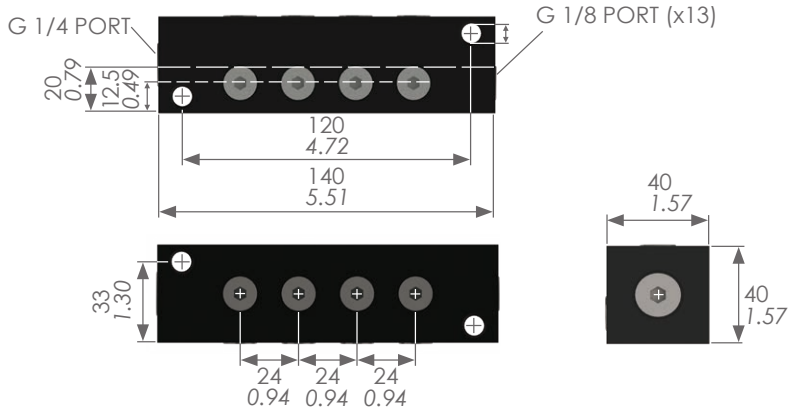

MET 1061 & 1061-A
4 WAY ADAPTOR

MET 1061

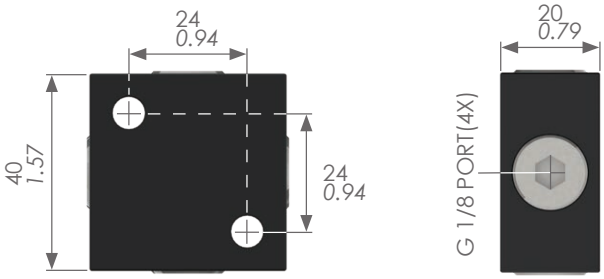

MET 1061-A

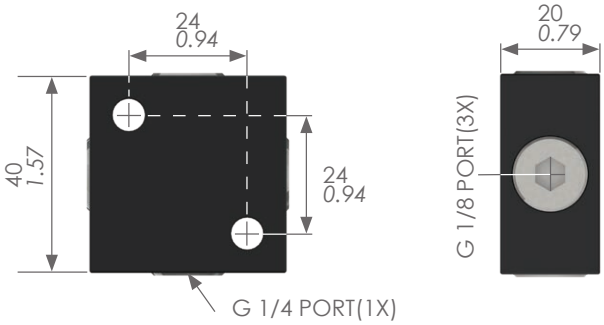

MET8400 DIGITAL PRESSURE SWITCH MONITOR

The digital pressure monitor switch is ideal for piped gas spring systems where the pressure is critical, if the pressure drops below a certain level the tool produces a bad part.

The pressure monitor can be set to the critical pressure level and should the pressure in the system fall below the set level then the press unit will alarm.

- **Digital display.**
- **NO or NC (selectable).**
- **Supply Voltage 15-35V dc.**
- **2 switching outputs.**
- **Connection G1/4.**

MET8400 pressure switch connected to MET222 via MET1061-A 4 way adaptor control panel.

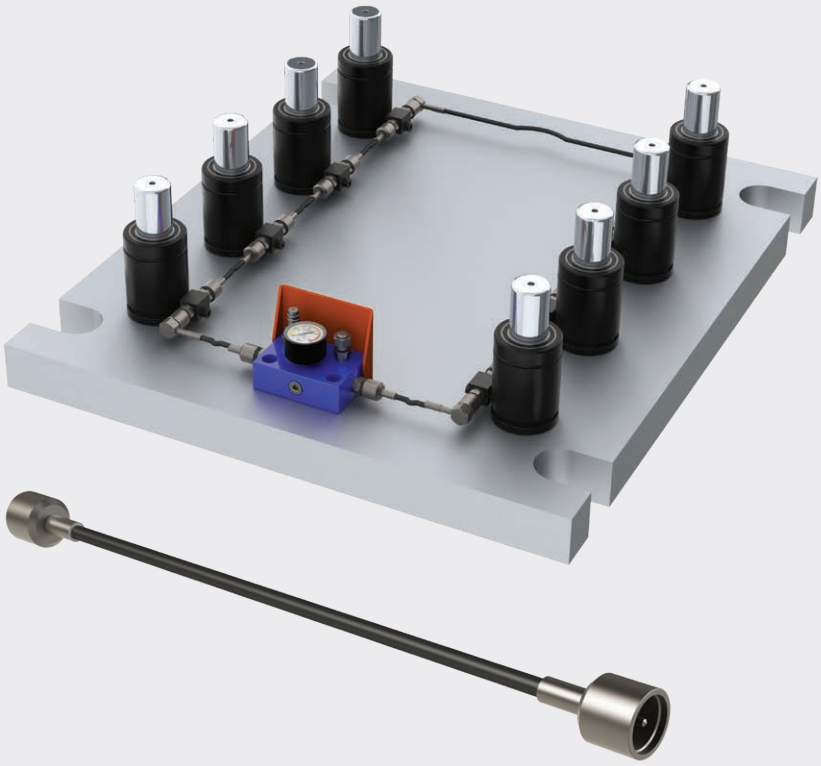

Features:

- Material: Black polyamide construction with synthetic fibre braid.
- Minimum bend radius: 20mm
- Max working pressure: 500bar

Advantages:

- O-ring Sealed and vibration resistant hose fitting.
- Finger tighten hoses
- A complete hose can be removed and system remains charged
- Large range of adaptors
- Direct connection of G1/8 port to hose

No direct hose to spring connection available for M6 port, the valve must be removed prior to fitting the hose system.

M6 PORT

MET1054-1057 – SPRING TO T-ADAPTOR

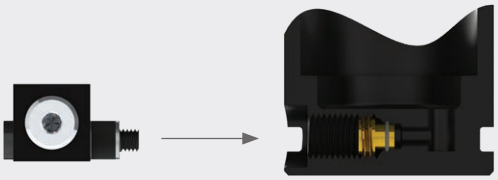

G 1/8 PORT

MET1040 – SPRING TO HOSE ADAPTOR

MET1050 – 1053 – SPRING TO T-ADAPTOR

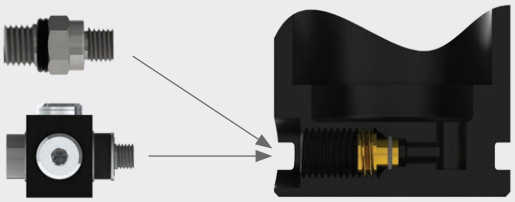

KEVLAR BRAIDED HOSE WITH STRAIGHT FITTINGS

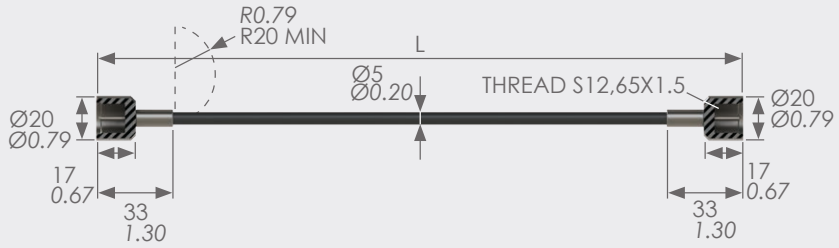

ORDER NO.	LENGTH (L) (mm) *(in.)*
MET 1000	200 - *7.87*
MET 1001	300 - *11.81*
MET 1002	400 - *15.75*
MET 1003	500 - *19.69*
MET 1004	600 - *23.62*
MET 1005	800 - *31.50*
MET 1006	1000 - *39.37*
MET 1007	1200 - *47.24*
MET 1008	1500 - *59.06*
MET 1009	2000 - *78.74*
MET 1010	2500 - *98.43*
MET 1011	3000 - *118.11*
MET 1012	CUSTOMER SPECIFICATION
MINIMUM LENGTH 100MM *(3.94)*	

KEVLAR BRAIDED HOSE WITH STRAIGHT AND COMPACT 90 FITTINGS

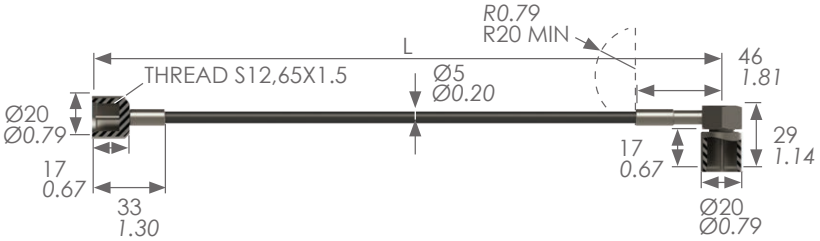

ORDER NO.	LENGTH (L) (mm) *(in.)*
MET 1013	200 - *7.87*
MET 1014	300 - *11.81*
MET 1015	400 - *15.75*
MET 1016	500 - *19.69*
MET 1017	600 - *23.62*
MET 1018	800 - *31.50*
MET 1019	1000 - *39.37*
MET 1020	1200 - *47.24*
MET 1021	1500 - *59.06*
MET 1022	2000 - *78.74*
MET 1023	2500 - *98.43*
MET 1024	3000 - *118.11*
MET 1025	CUSTOMER SPECIFICATION
MINIMUM LENGTH 100MM *(3.94)*	

KEVLAR BRAIDED HOSE WITH COMPACT 90 FITTINGS

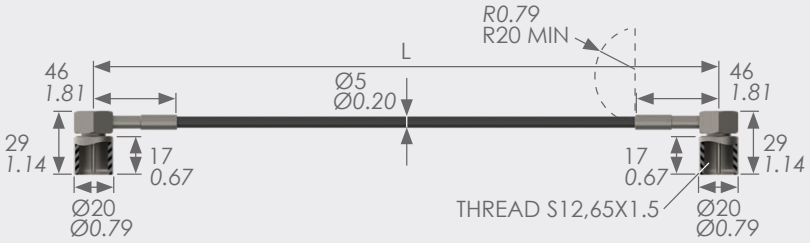

ORDER NO.	LENGTH (L) (mm) *(in.)*
MET 1026	200 - *7.87*
MET 1027	300 - *11.81*
MET 1028	400 - *15.75*
MET 1029	500 - *19.69*
MET 1030	600 - *23.62*
MET 1031	800 - *31.50*
MET 1032	1000 - *39.37*
MET 1033	1200 - *47.24*
MET 1034	1500 - *59.06*
MET 1035	2000 - *78.74*
MET 1036	2500 - *98.43*
MET 1037	3000 - *118.11*
MET 1038	CUSTOMER SPECIFICATION
MINIMUM LENGTH 100MM *(3.94)*	

Please see page 123 for CNOMO hose components MET1080 (Straight end) MET1081 (90 degree end) and MET1082 (Micro bore hose).

MET 1050

4 way multiple adaptor

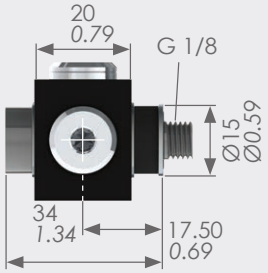

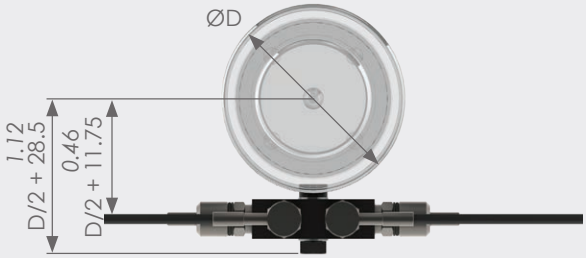

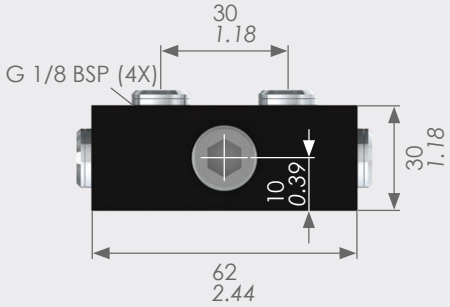

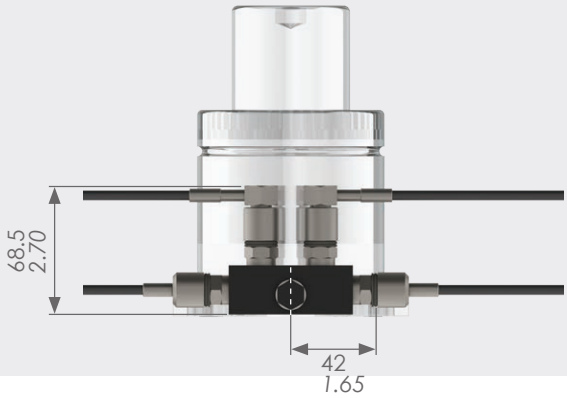

MET 1051

Multiple adaptor when springs are clamped using SF flange

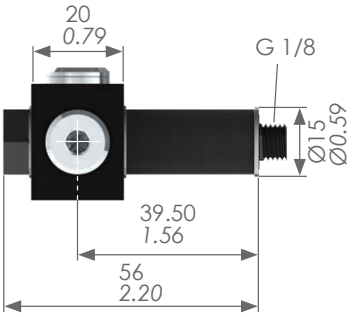

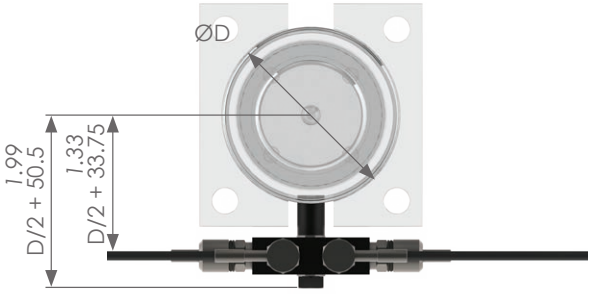

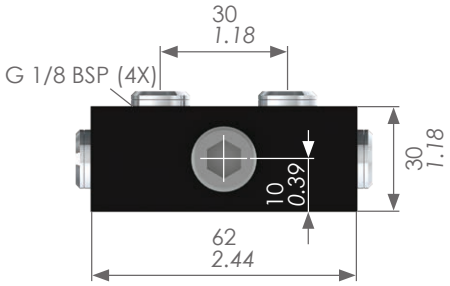

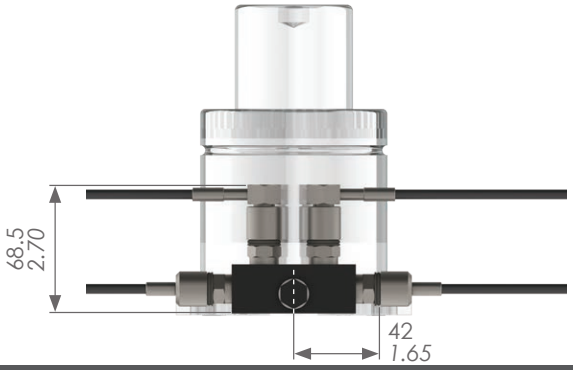

MET 1052

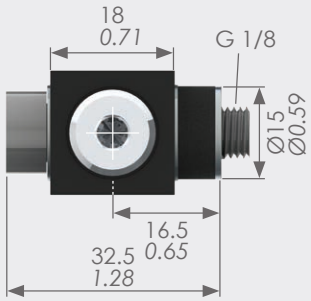

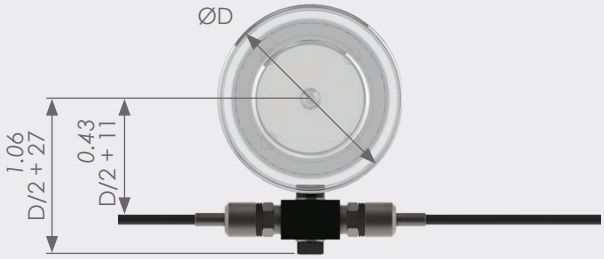

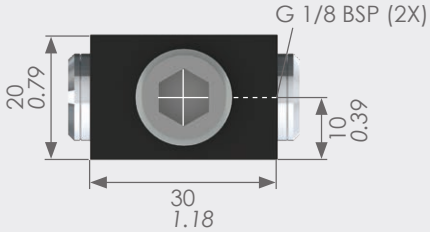

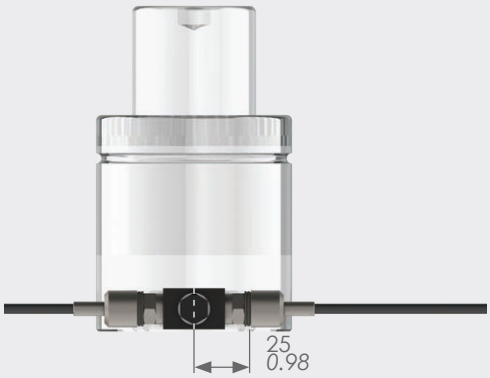

MET 1053

When springs are clamped using SF Flange.

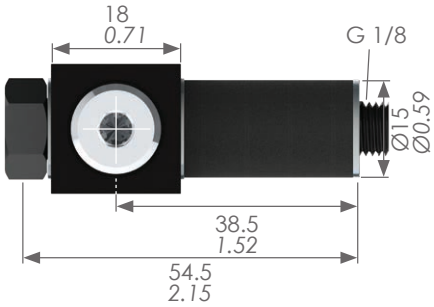

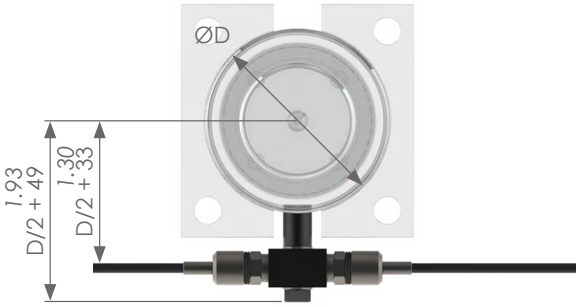

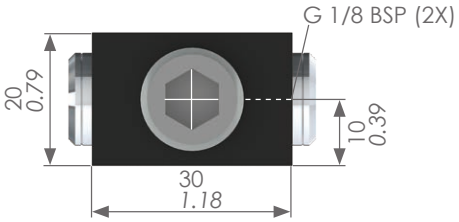

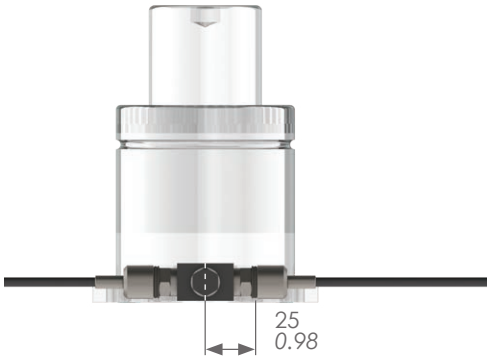

MET 1054

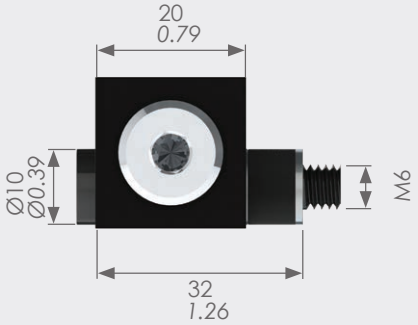

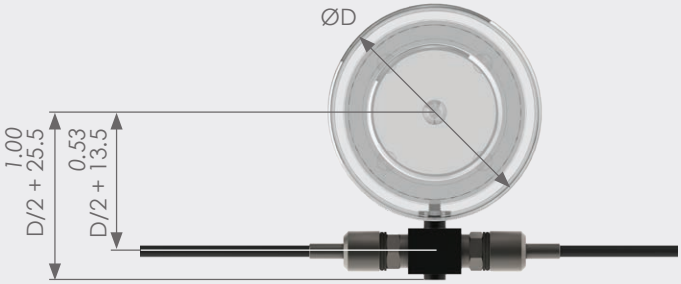

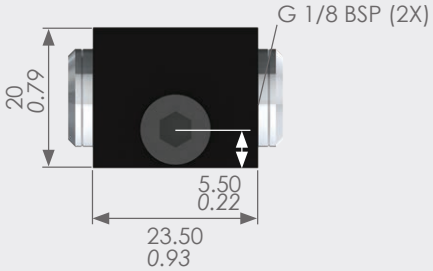

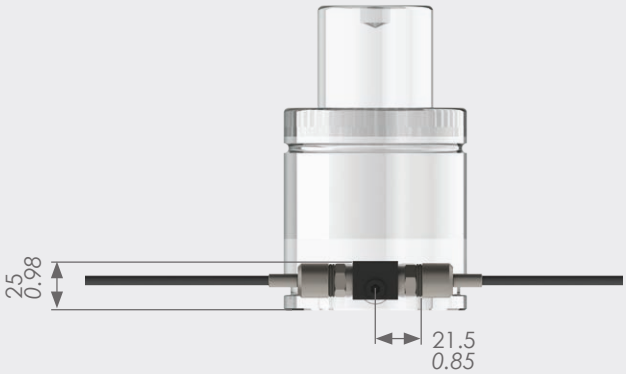

MET 1055

When using SF Flange.

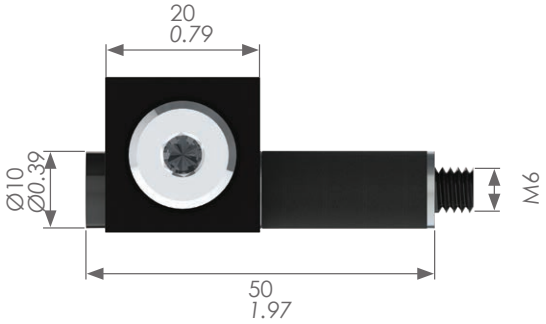

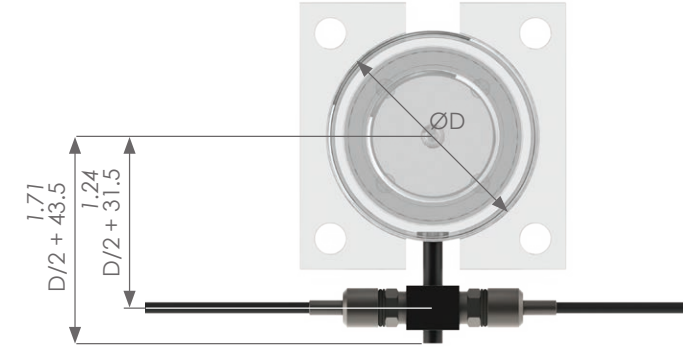

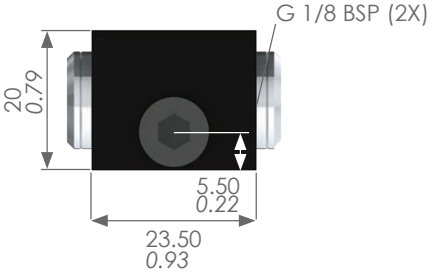

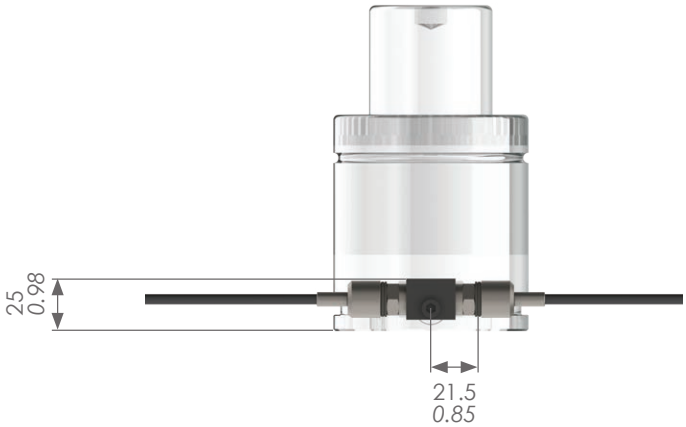

MET 1056

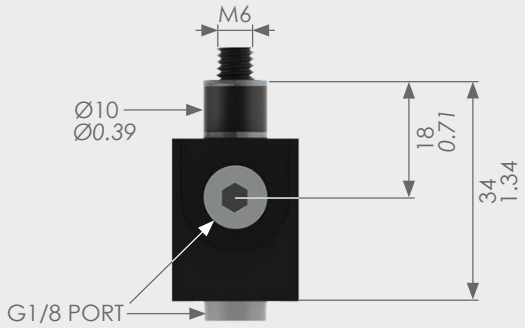

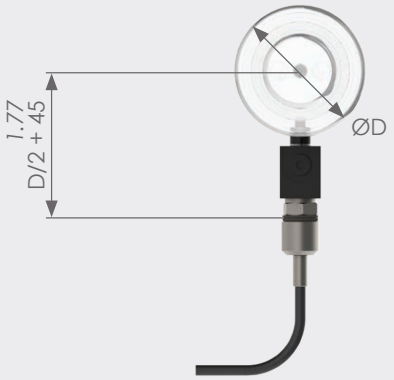

MET 1057

When using SF Flange.

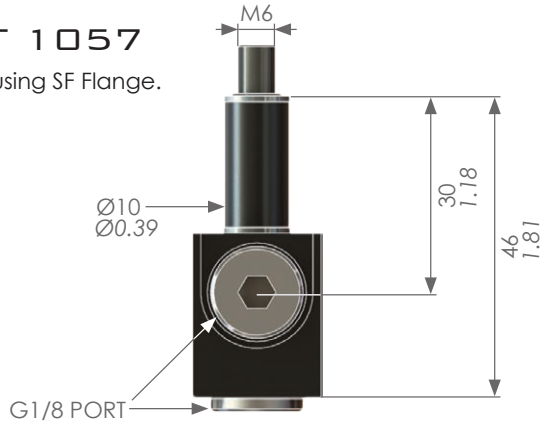

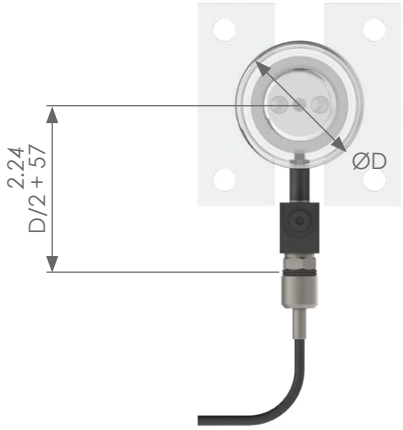

MET 1056 & 1057

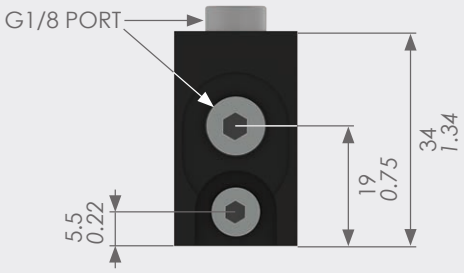

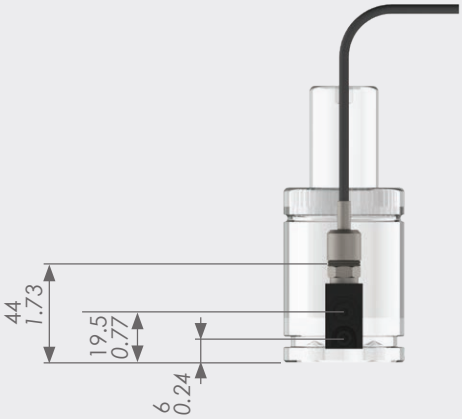

MET 1040

One way valve coupling

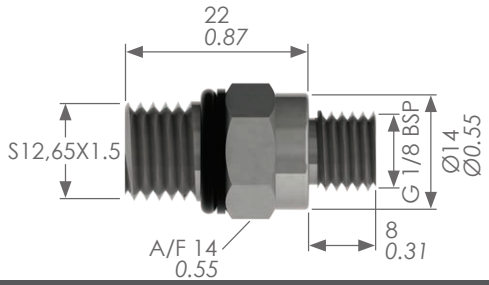

Gas Spring direct to CNOMO hose connection

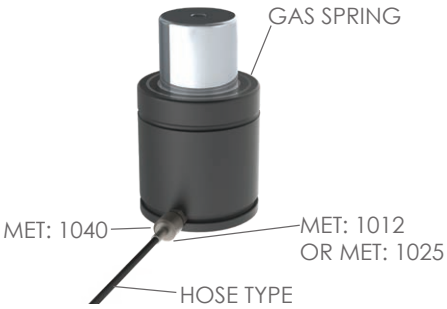

1. MET111 Control Panel
2. MET1040
3. MET1012
4. MET1060

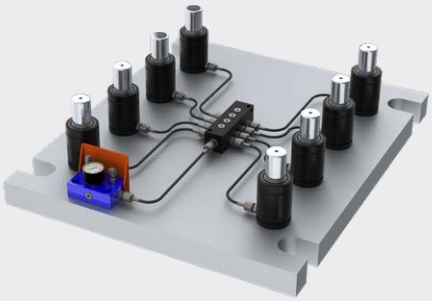

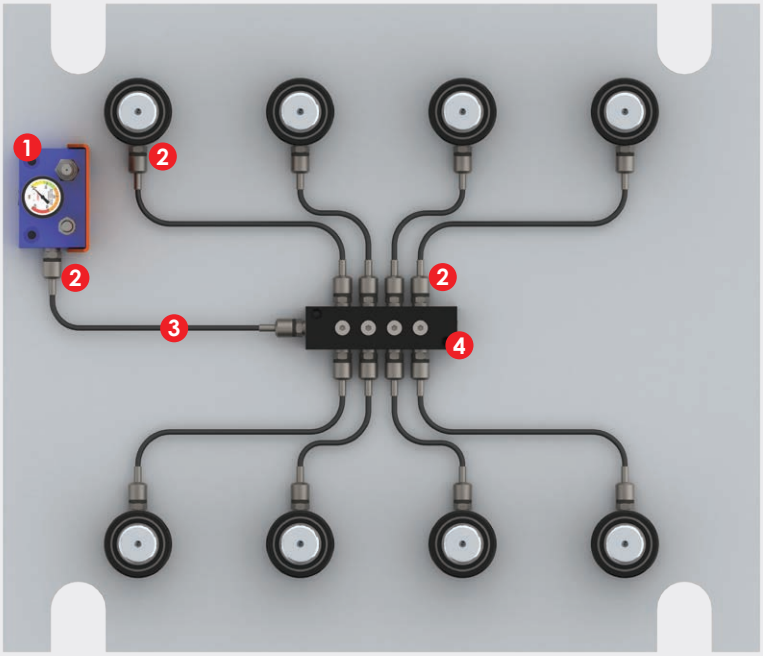

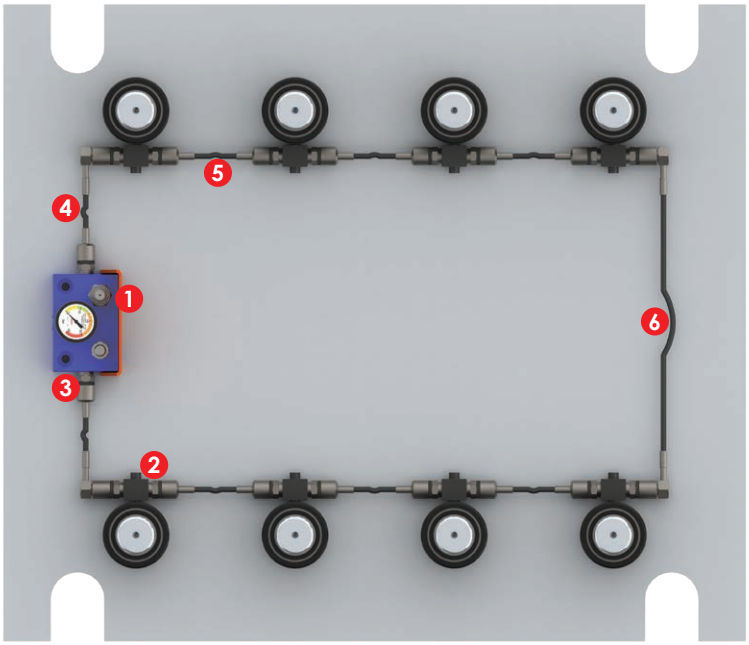

1. MET111 Control Panel
2. MET1052
3. MET1040
4. MET1025
5. MET1012
6. MET1038

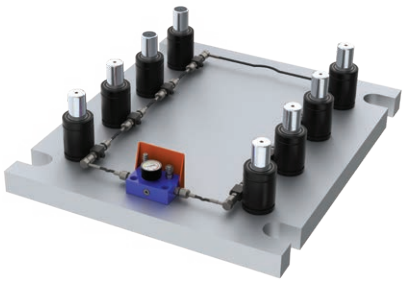

Features:

- Material: Black polyamide construction with synthetic fibre braid.
- Minimum bend radius: 20mm
- Max working pressure: 500bar

Advantages:

- Dual sealed to prevent leaking
- Compact hose fittings and adaptors where space is restricted.
- Direct connection of M6 and G1/8 port to hose

No direct hose to spring connection available for M6 port, the valve must be removed prior to fitting the hose system.

MET2001 – HOSE TO SPRING ADAPTOR

MET2010 TO MET2017 - SPRING TO T-ADAPTOR

MET2002 - SPRING TO HOSE ADAPTOR

MET2010 TO 2017 - SPRING TO T-ADAPTOR

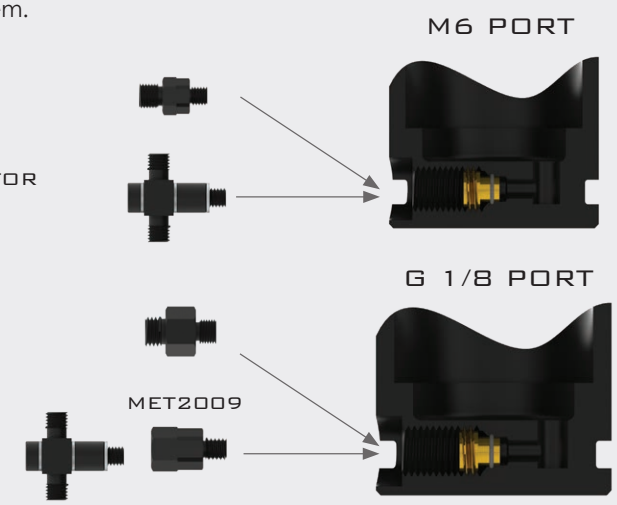

The micro hose system is primarily used with M6 ports or where space is limited. The dual seal system prevents leaking and gives protection against vibration and rotation.

Custom hose lengths for the Micro range can be specified.

ORDER NO.	LENGTH (L) (mm) *(in.)*
MET 2020	**200** - *7.87*
MET 2021	**300** - *11.81*
MET 2022	**400** - *15.75*
MET 2023	**500** - *19.69*
MET 2024	**600** - *23.62*
MET 2025	**800** - *31.50*
MET 2026	**1000** - *39.37*
MET 2027	**1500** - *59.06*
MET 2028	**2000** - *78.74*
MET 2030	**CUSTOMER SPECIFICATION**
MINIMUM LENGTH 80MM *(3.15)*	

BASIC INFORMATION

Material: Polyamide Black

External Dimension: 5mm

Volume: 3ml/meter

Outer Casing: Perforated

Min. Bend Radius: 20mm

Temperature Range: -20°C 80°C

Max. Working Pressure: 500 bar

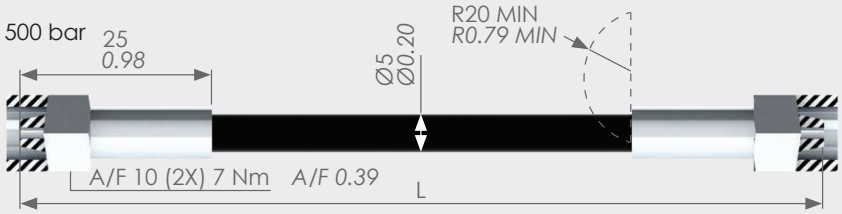

Please see page 123 for MICRO hose components MET1085 (Straight end) and MET1082 (Micro bore hose).

MICRO HOSE ADAPTORS

The following adapters are used to connect Micro Hose .

MET 2004

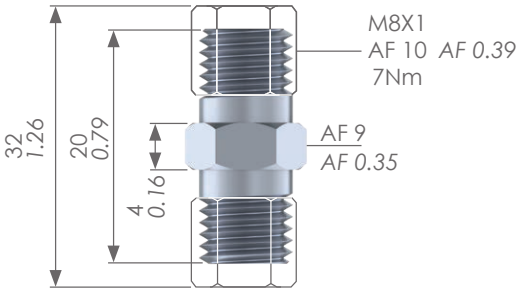

MET 2005

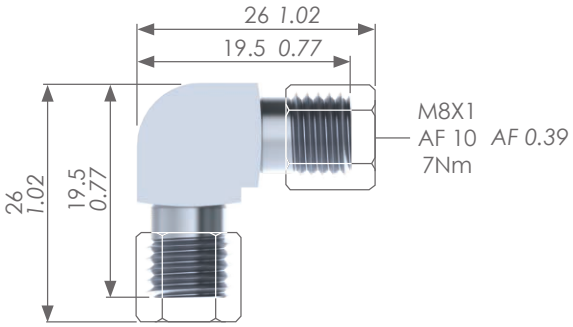

MET 2006

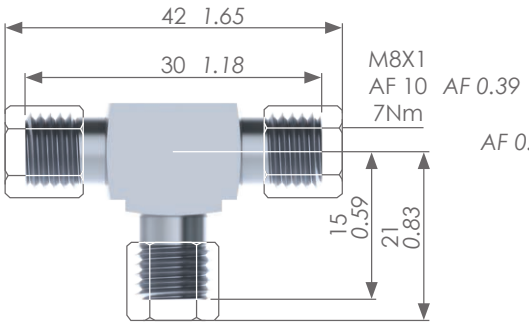

MET 2007

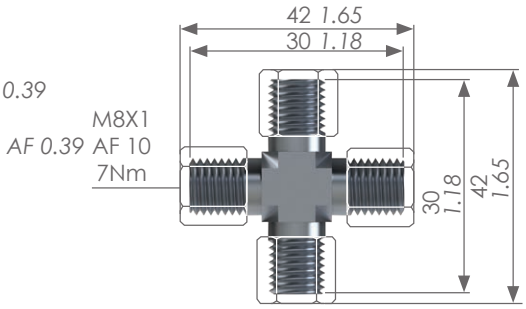

MET 2001

For connection of hose to gas spring with M6 Port.

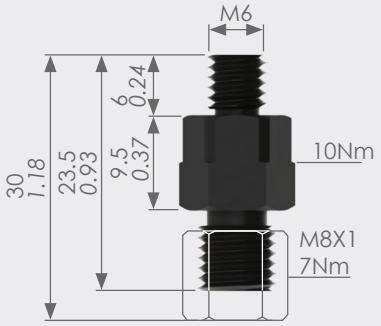

MET 2002

For connection to control panel or gas spring with G1/8 Port.

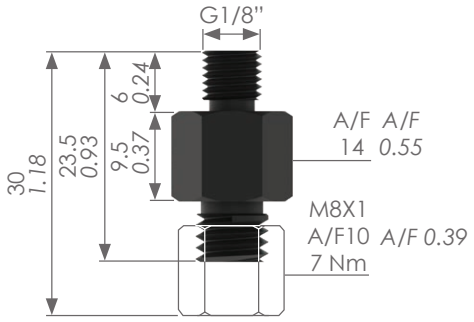

MET 2009

Adapter for Connection of G1/8 Port when using T-adapter on the Micro Hose System.

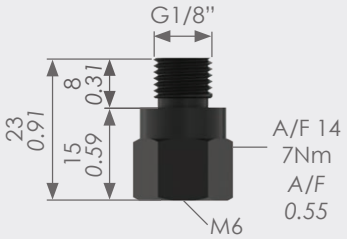

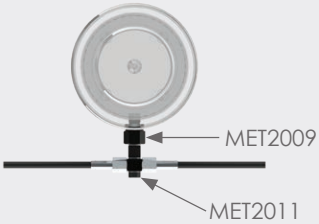

(All dimensions are mm, unless otherwise stated)

MET 2010

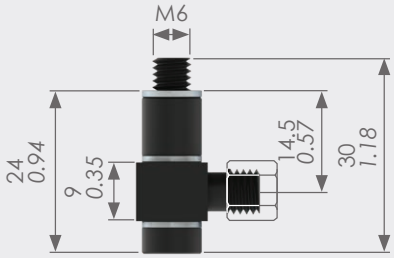

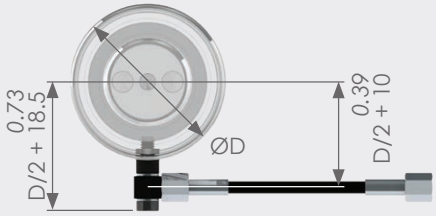

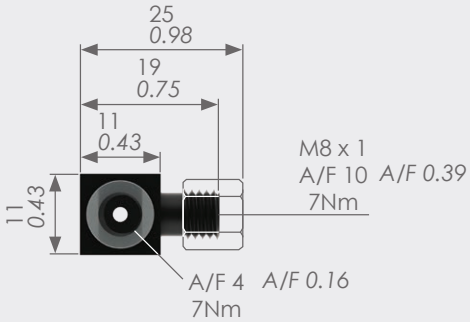

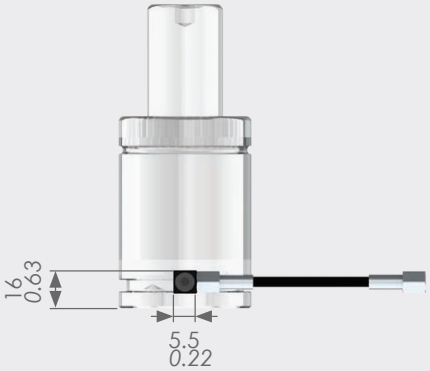

MET 2014

When using SF Flange.

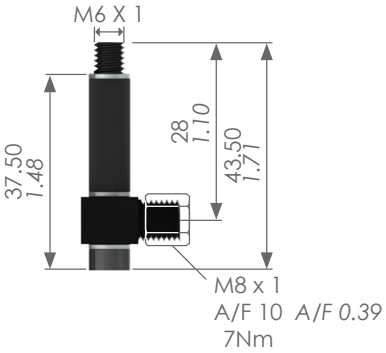

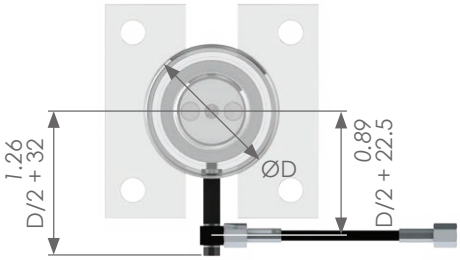

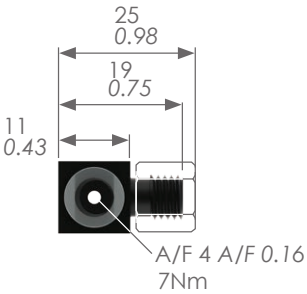

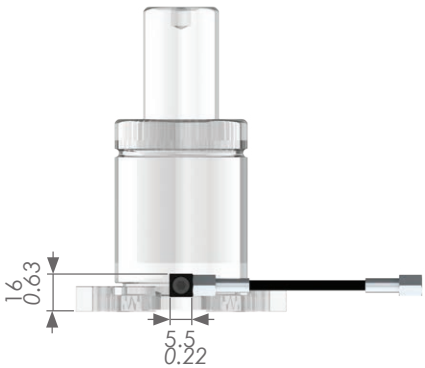

MET 2011

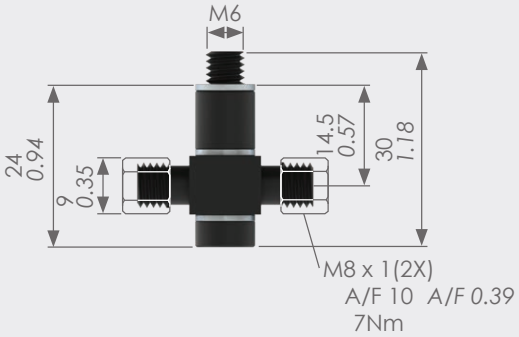

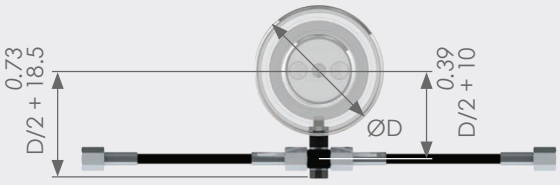

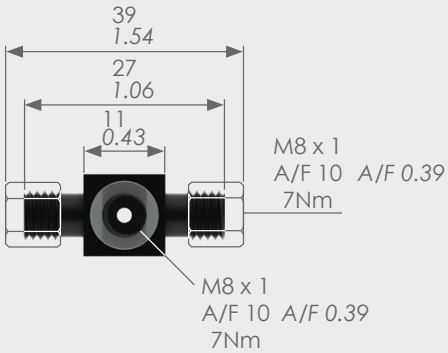

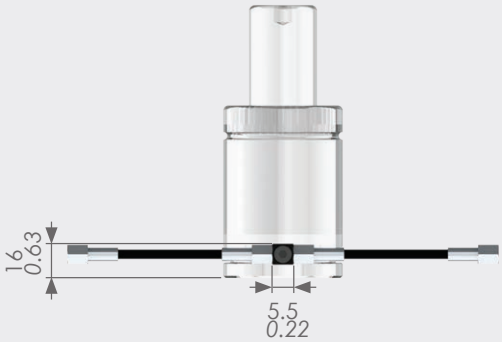

MET 2015

When using SF Flange.

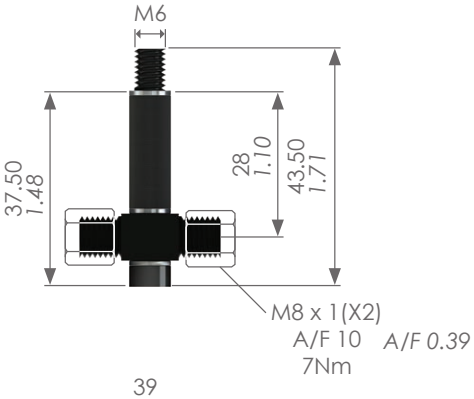

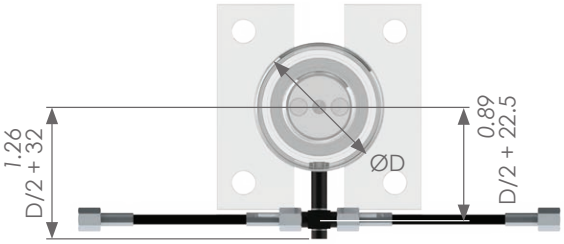

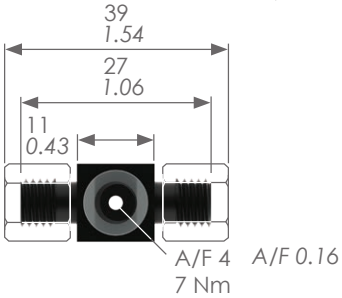

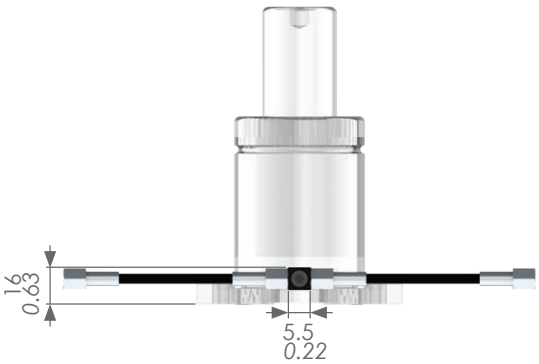

MET 2012

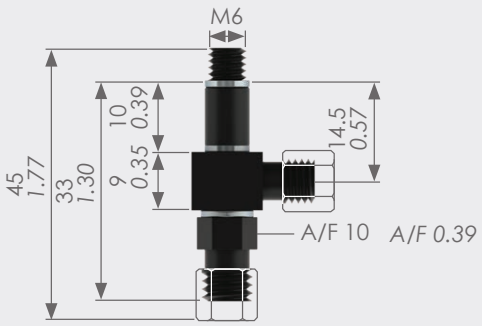

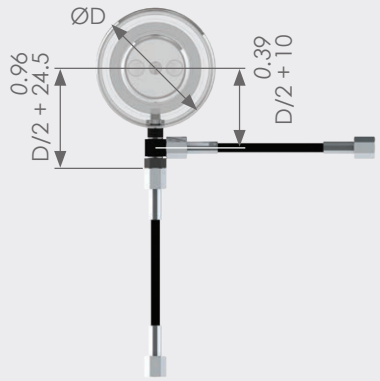

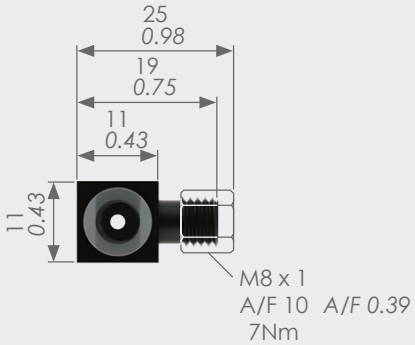

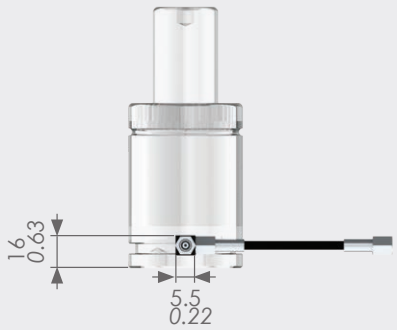

MET 2016

When using SF Flange.

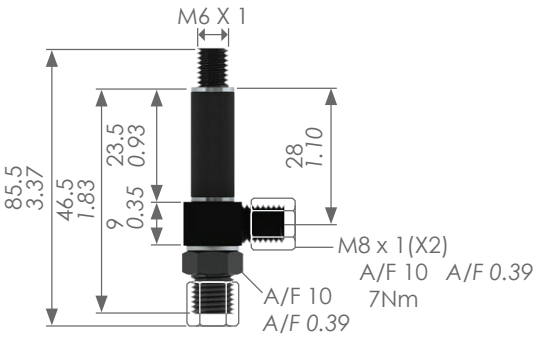

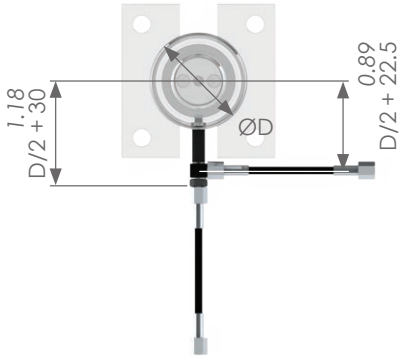

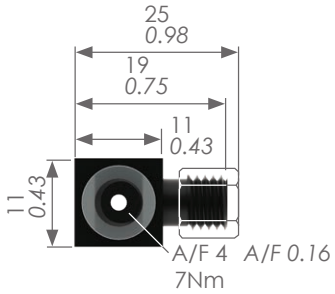

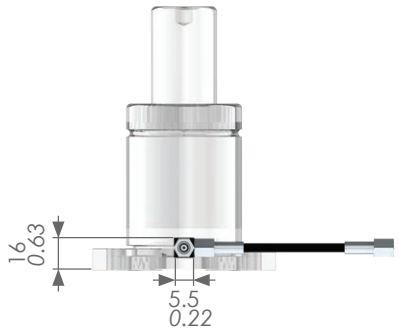

MET 2013

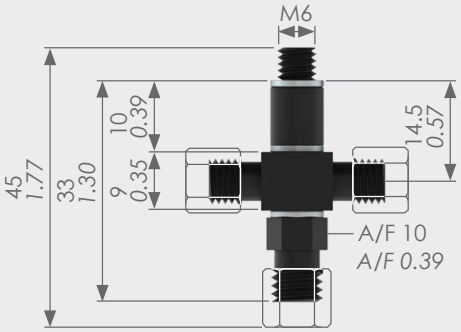

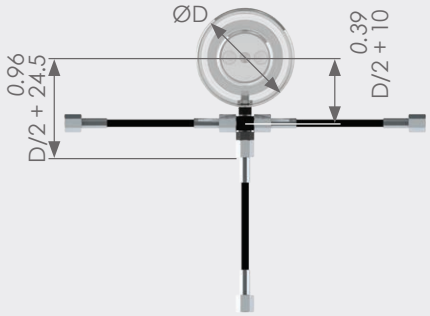

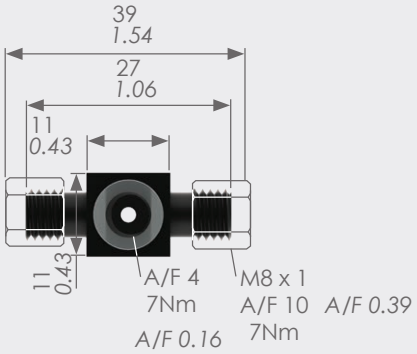

MET 2017

When using SF Flange.

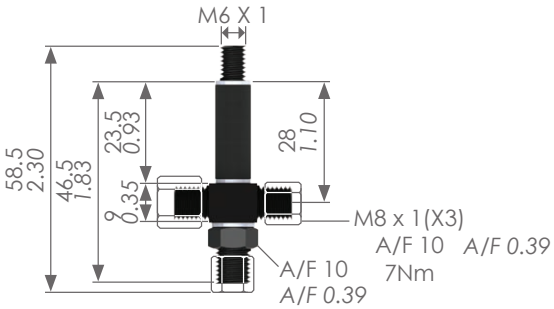

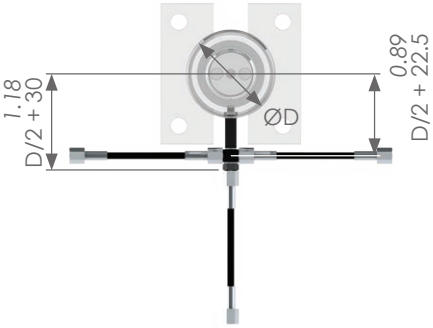

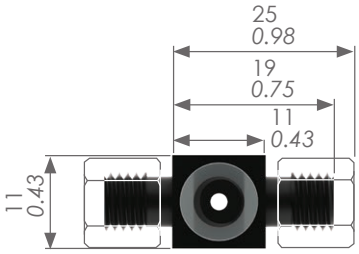

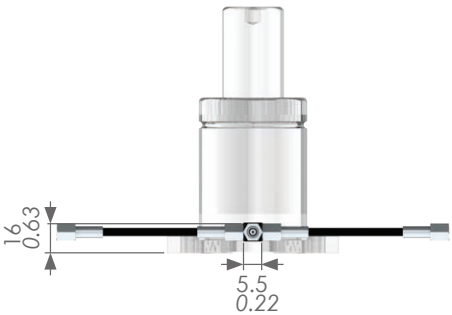

1. MET111 Control Panel
2. MET2002
3. MET2005
4. MET2006
5. MET2001
6. MET2011
7. MET2013
8. MET2012
9. MET2010

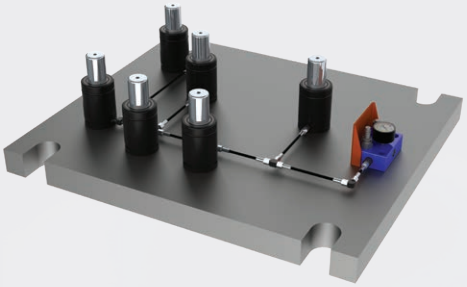

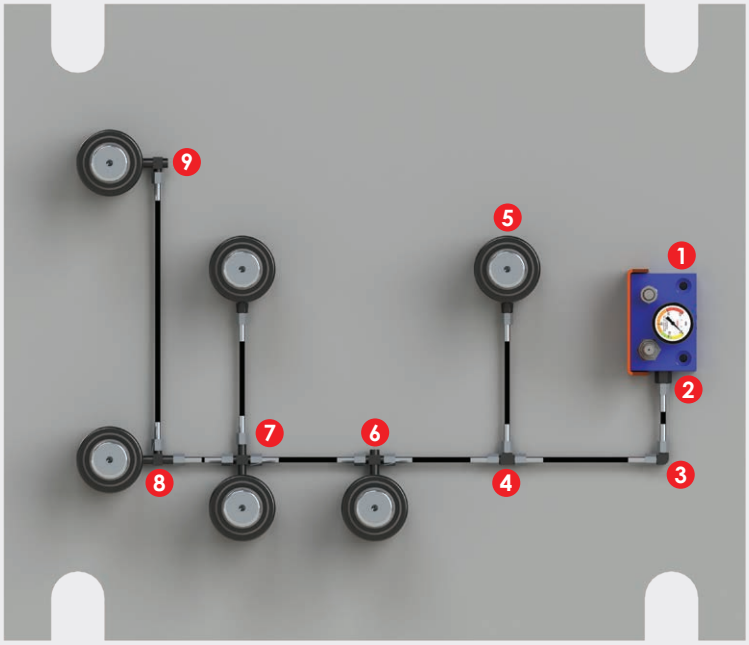

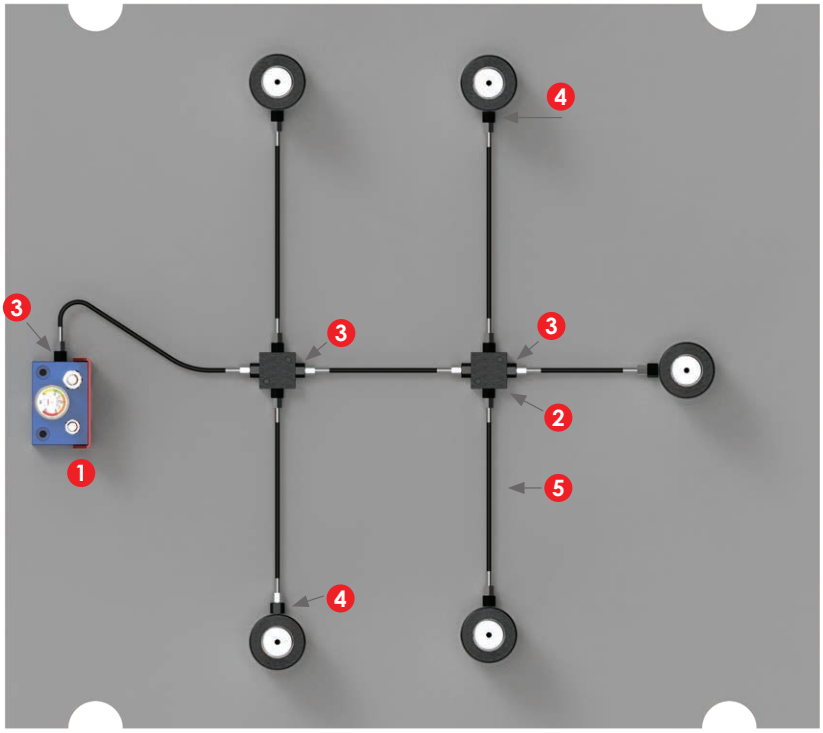

1. MET111 Control Panel
2. MET1061
3. MET2002
4. MET2001
5. MET2030

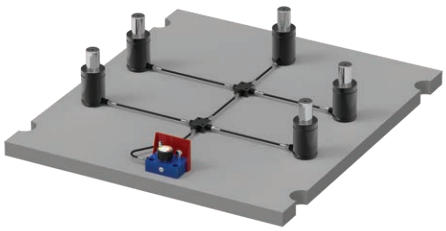

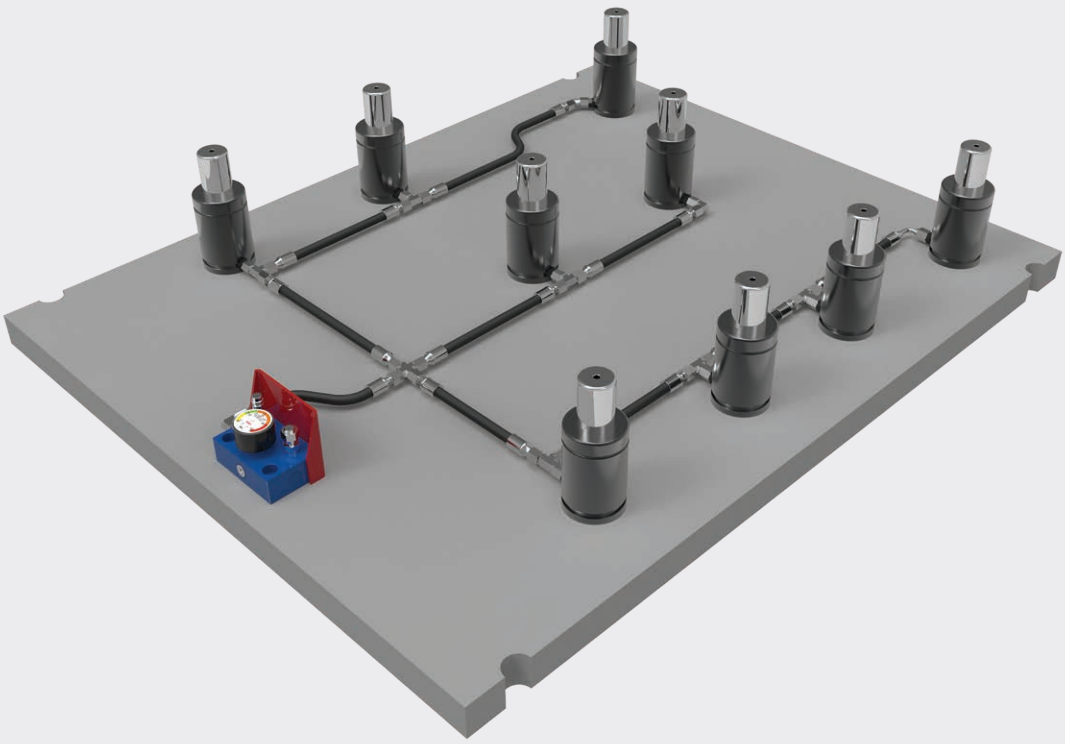

Features:

- Material: Black polyamide construction with synthetic fibre braid.
- Minimum bend radius: 40mm
- Max working pressure: 500bar

Advantages:

- Dual sealed to prevent leaking
- High flow rate for large volume springs
- High flow rate for use with expansion tanks
- Direct connection of M12 and G1/8 port to hose

The valve must be removed prior to fitting the hose system.

MET3001 – HOSE TO SPRING ADAPTOR

G 1/8 PORT

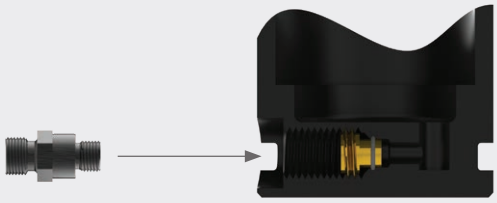

MET3001

The S24 System uses large bore hose where high gas flow is required.

S24 hoses can be used where larger gas springs are fitted which will allow quicker charging and degassing of the system.

S24 hoses must be used where expansion tanks are fitted to the system.

S24 hoses have a seal in the end fittings ensuring a reliable, leak free hose system.

BASIC INFORMATION

Material: Thermoplastic
Min. Bend Radius: 40mm
Ext. Dimension: 11mm
Temperature Range: -40 °C - +93 °C

STRAIGHT - STRAIGHT

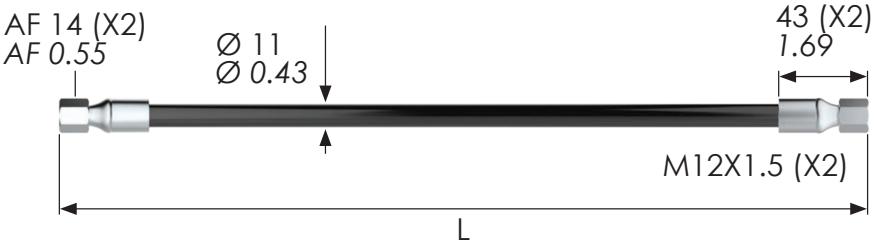

Part Number	Length (L)
MET 3020	XXXXmm (length)

Ordering example: MET3020-100mm

STRAIGHT - 45 °

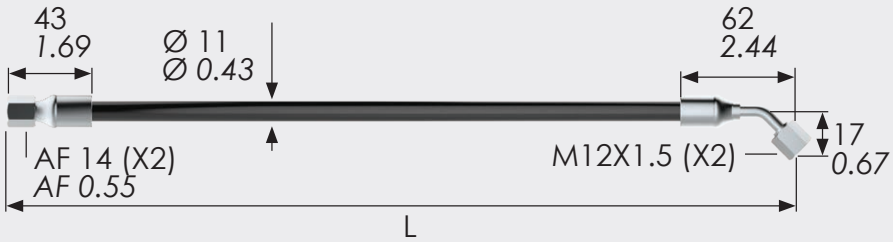

Part Number	Length (L)
MET 3021	XXXXmm (length)

Ordering example: MET3021-100mm

STRAIGHT - 90 °

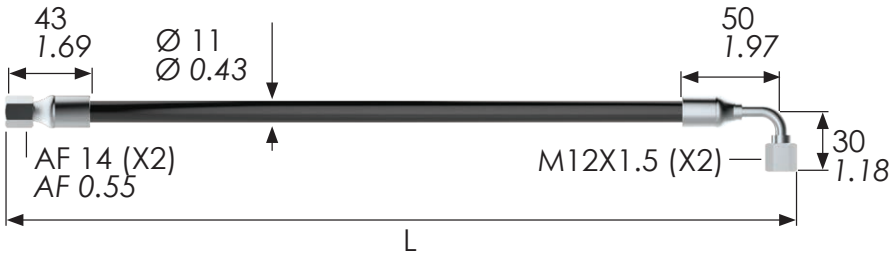

Part Number	Length (L)
MET 3022	XXXXmm (length)

Ordering example: MET3022-100mm

Please see page 118 for S24 hose components MET3012 (Straight end) MET3013 (45 degree end) and MET3014 (90 degree end).

45 ° - 45 °

Part Number	Length (L)
MET 3023	XXXXmm (length)

Ordering example: MET3023-100mm

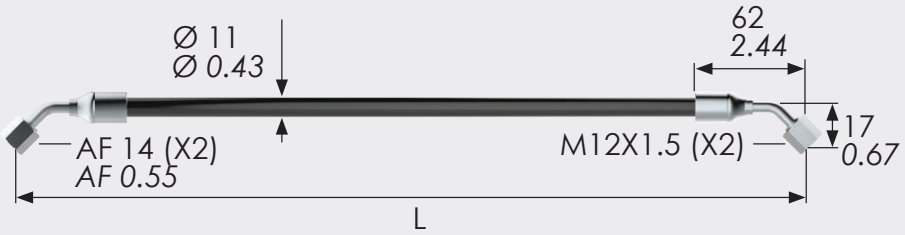

90 ° - 90 °

Part Number	Length (L)
MET 3024	XXXXmm (length)

Ordering example: MET3024-100mm

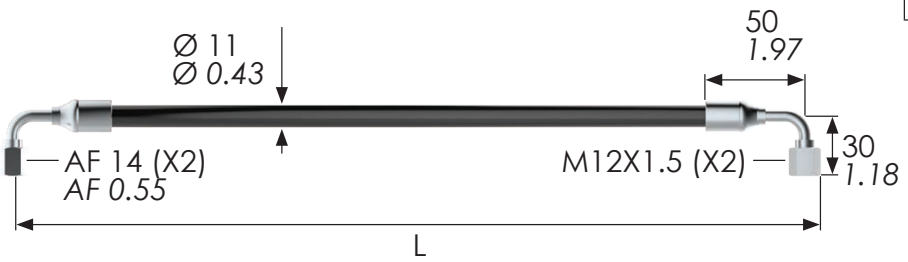

45 ° - 90 °

Part Number	Length (L)
MET 3025	XXXXmm (length)

Ordering example: MET3025-100mm

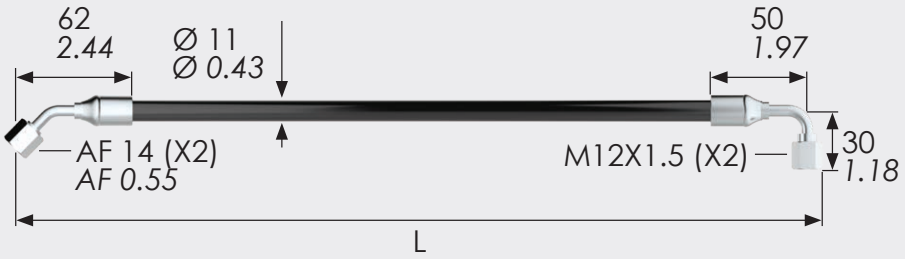

S24 Hose

Part Number	Length (L)
MET 3015	XXXXmm (length)

Ordering example: MET3015-100mm

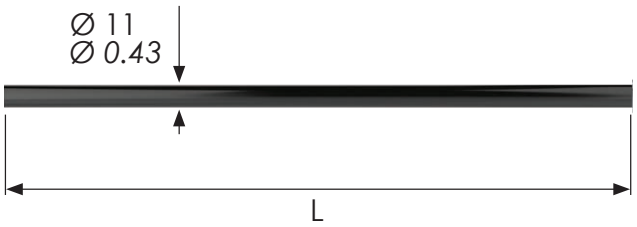

Please see page 118 for S24 hose components MET3012 (Straight end) MET3013 (45 degree end) and MET3014 (90 degree end).

MET 3012

S24 Straight hose end

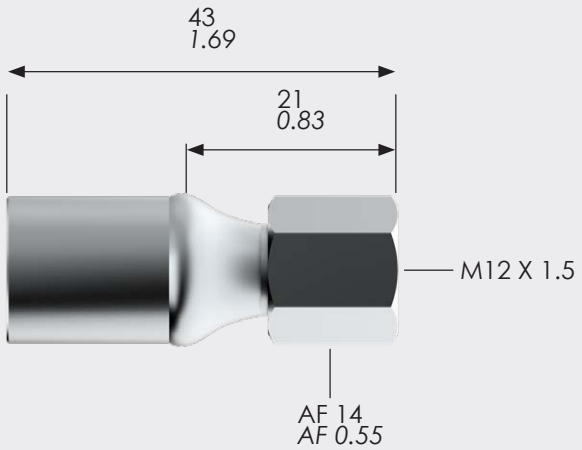

MET 3013

S24 45 ° Elbow hose end

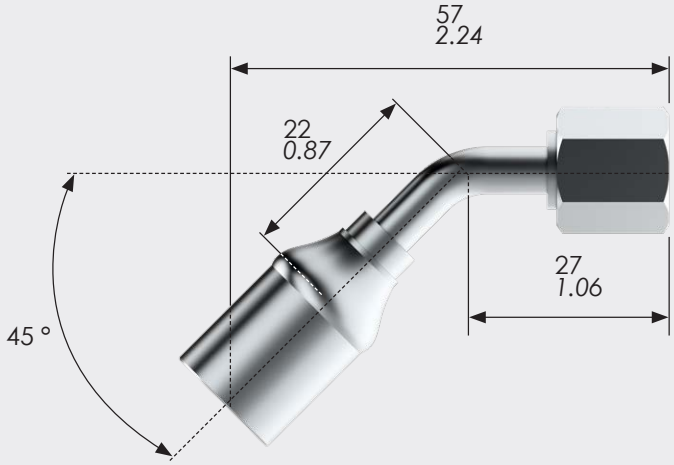

MET 3014

S24 90 ° Elbow hose end

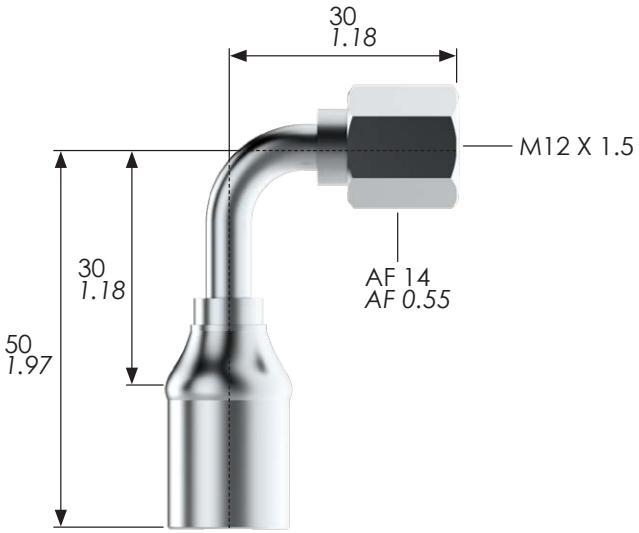

S24 HOSE ADAPTOR

MET 3001

S24 G1/8 adaptor for direct connection of hose to spring or MET002 to MET005.

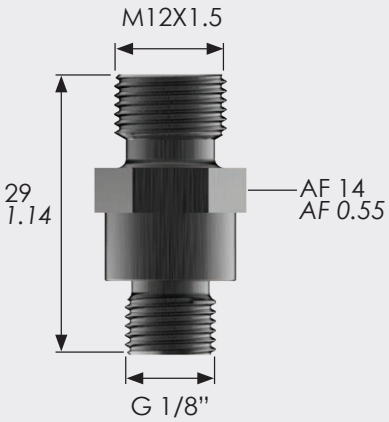

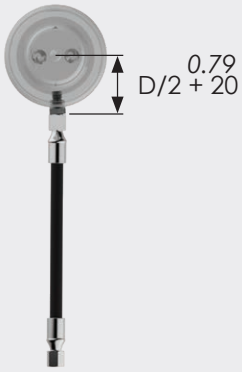

MET 3002

S24 T-Piece adaptor

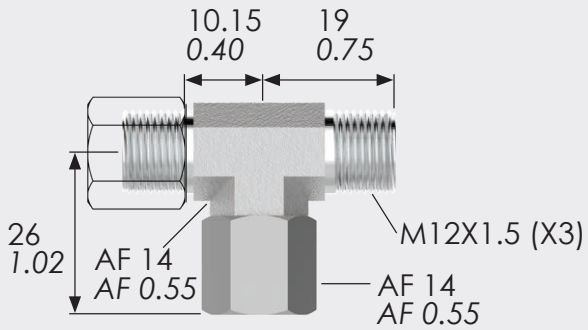

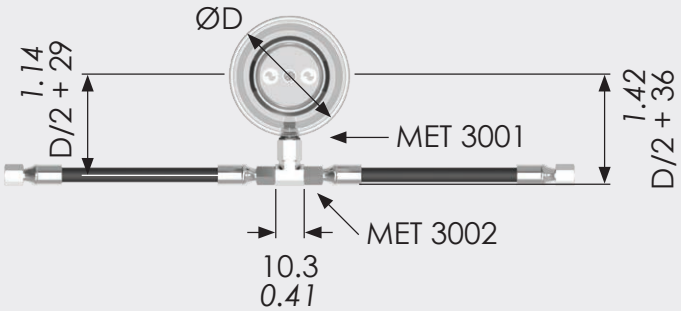

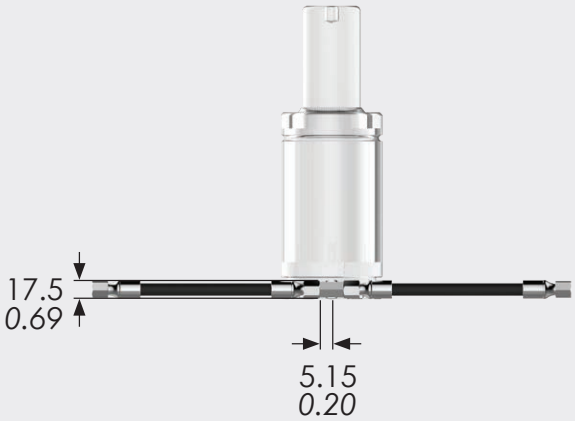

MET 3003

S24 90 ° T adaptor

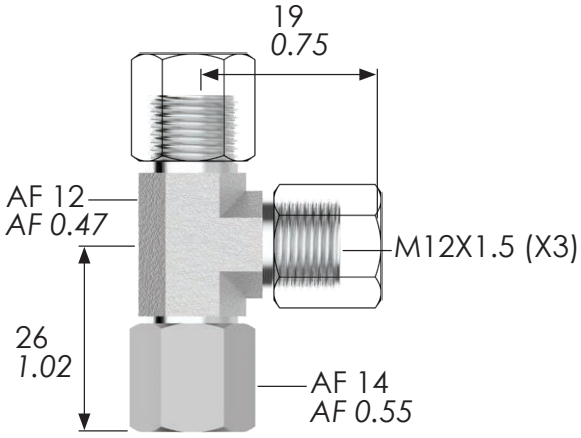

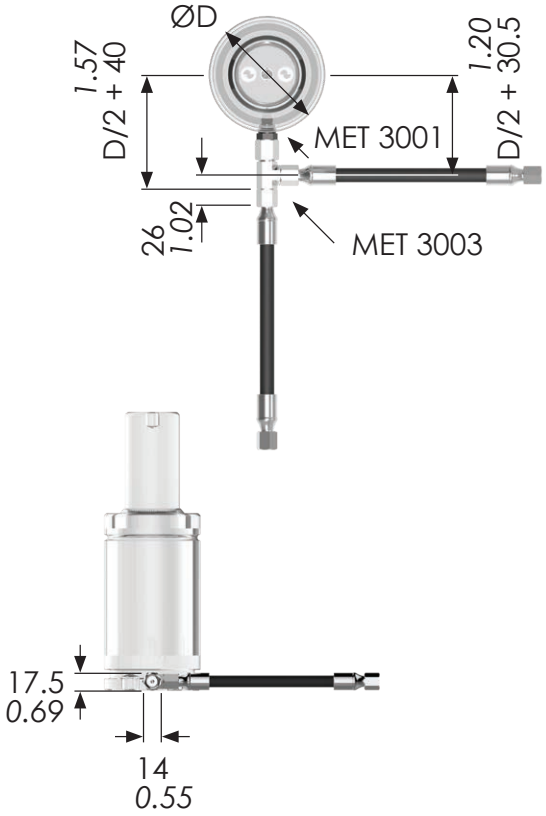

Flanges available with S24 hose systems

MET 3004

S24 90 ° Elbow adaptor

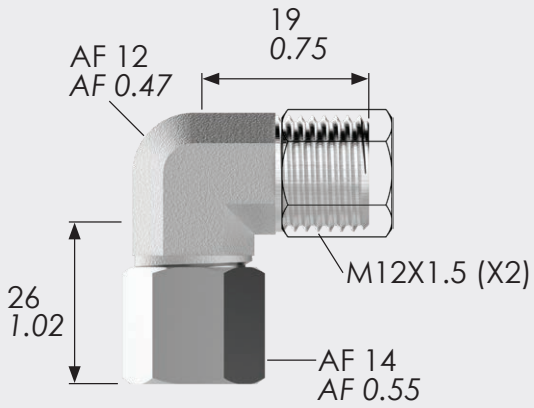

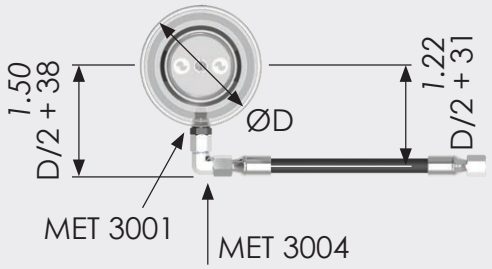

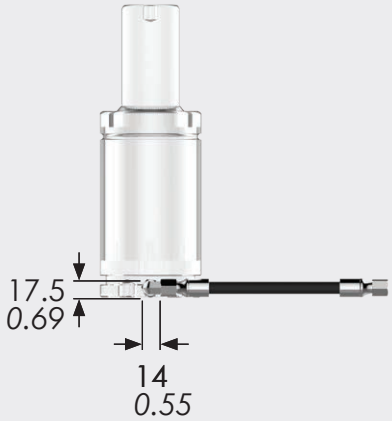

MET 3005

S24 45 ° Elbow adaptor

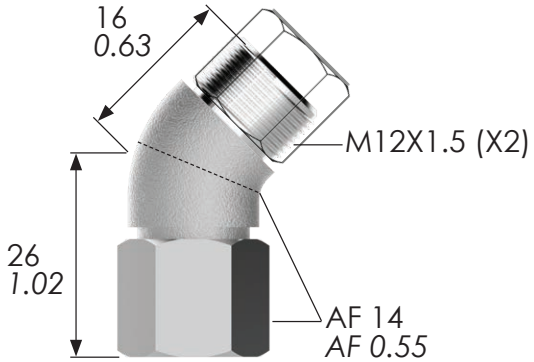

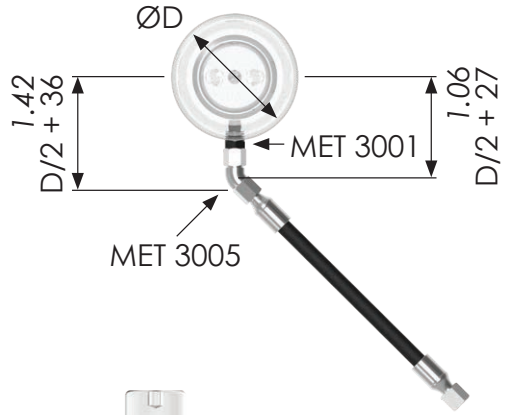

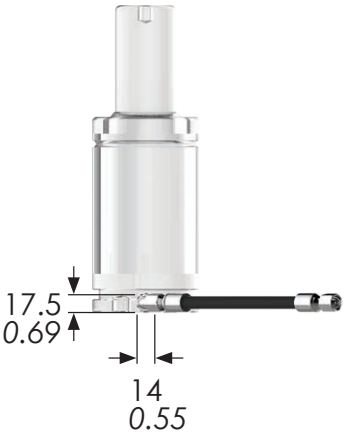

Flanges available with S24 hose systems

S24 HOSE ADAPTORS

The following adaptors & couplings are used to connect S24 Hoses

MET 3007
S x S hose connector

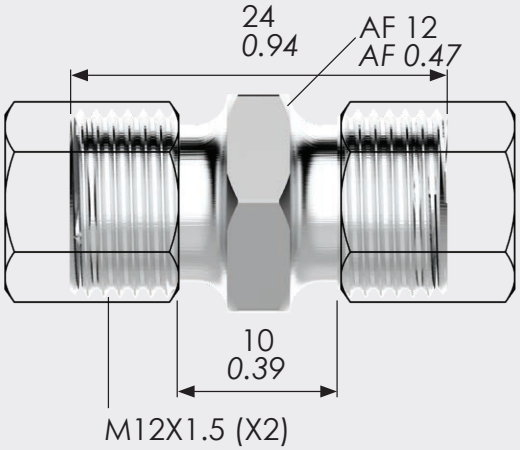

MET 3008
90 ° Elbow hose connector

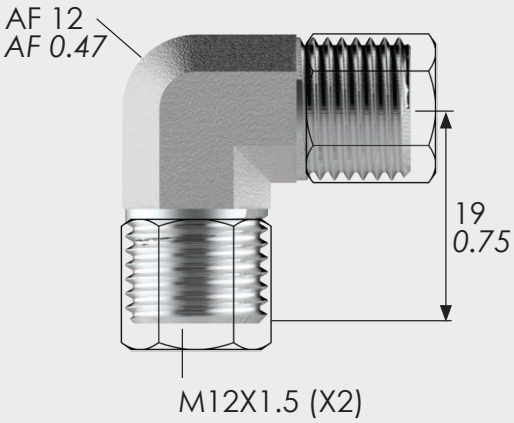

MET 3009
T hose connector

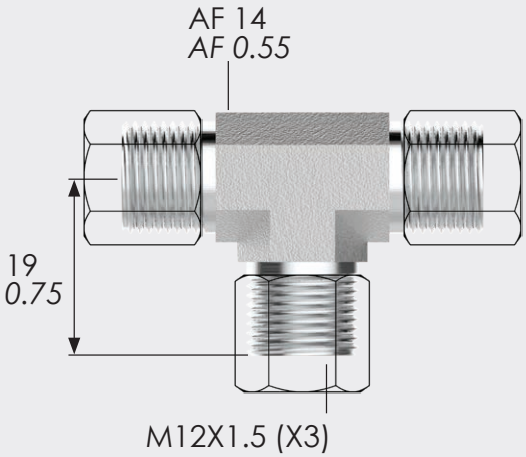

MET 3010
Cross hose connector

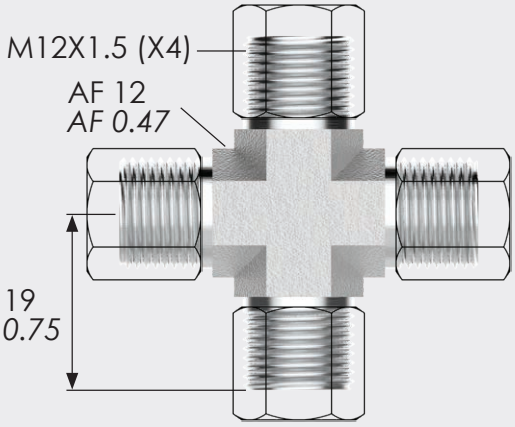

S24 HOSE SYSTEM
EXAMPLE

1. MET111 Control Panel
2. MET3004
3. MET3010
4. MET3001
5. MET3003
6. MET3002
7. MET3014
8. MET3005
9. MET3020
10. MET3022

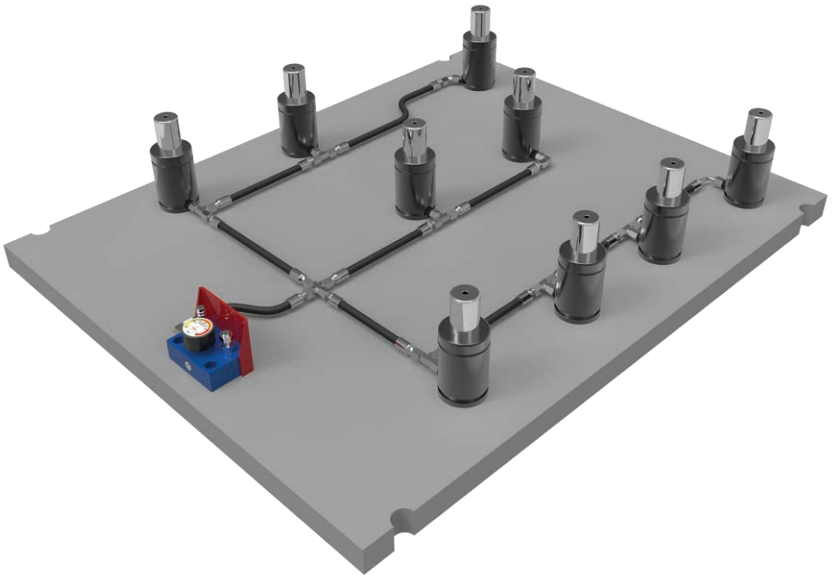

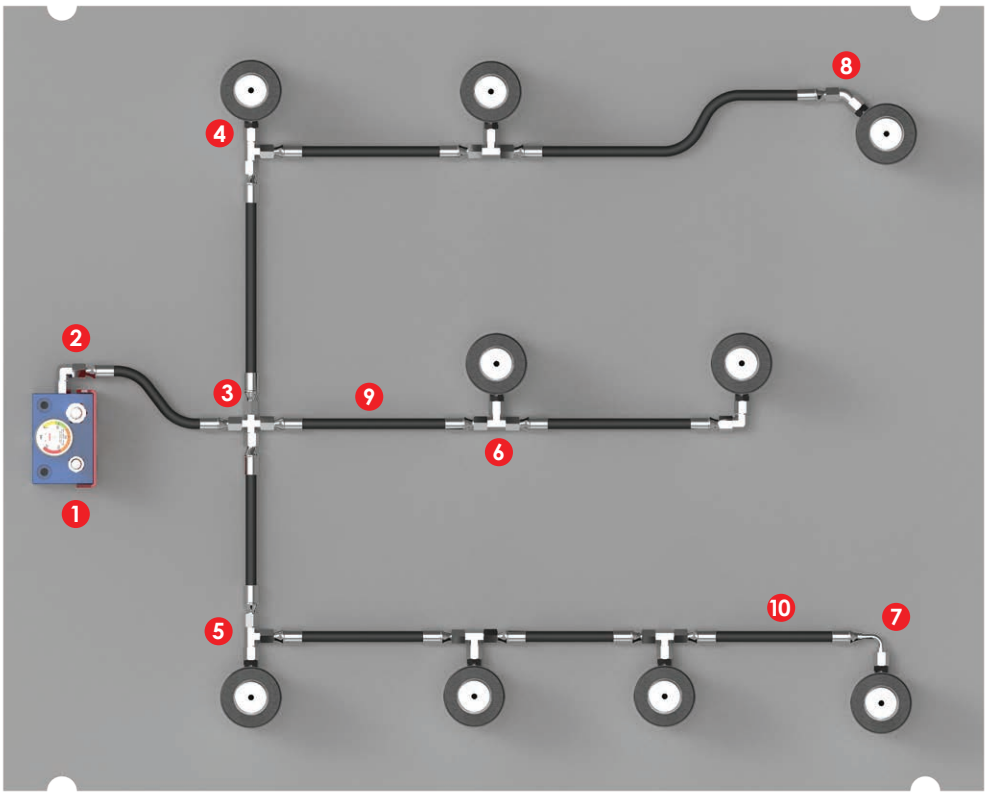

HOSE MAKING ACCESSORIES

FOR S24 HOSE COMPONENTS SEE PAGES 118

MET: 1080
CNOMO END FITTING - STRAIGHT

MET: 1081
CNOMO END FITTING - 90 DEGREE

MET: 1085
MICRO HOSE END

MET: 1082 - MICRO BORE HOSE
5MM DIA. HOSE FOR BOTH MICRO AND CNOMO HOSE SYSTEMS

MET: 1086
HOSE CUTTERS

MET: 1087
PORTABLE HOSE CRIMPING MACHINE

MET: 1088
BENCH MOUNT HOSE CRIMPING MACHINE

MET: 1089
PNEUMATIC FOOT OPERATED PEDAL

HOSE INSTALLATION GUIDELINES

Never exceed maximum values given for pressure and temperature for the hoses. Make sure all hoses and couplings are perfectly clean before fitting.

Select a hose length that will allow for a certain amount of movement.

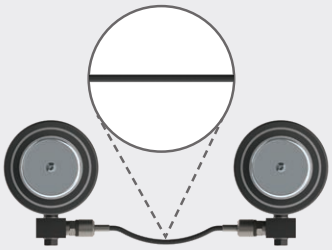

The longitudinal marking on the hose must not be twisted after fitting.

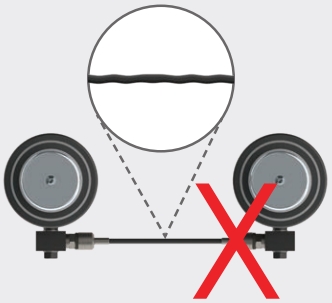

Select hose couplings that avoid sharp bends in the hose.

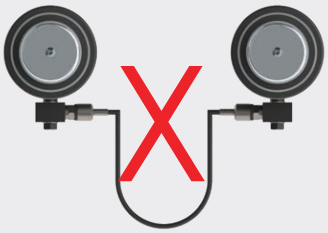

Never go below the recommended minimum bend radius of the hose.

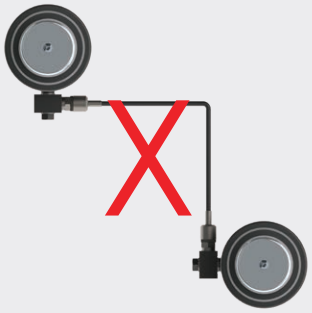

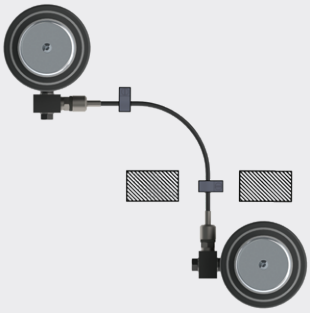

Fix the hose correctly to avoid mechanical damage.

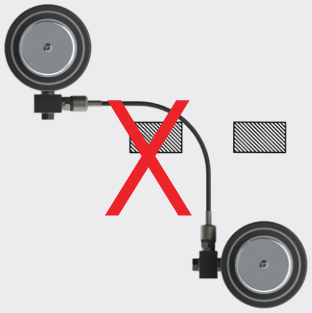

MET009 hose clip for both CNOMO and MICRO hose systems

MET010 hose clip for S24 hose systems

Expansion tanks can be fitted to a hosed gas spring system to reduce the force rise during spring compression. The size and volume of the tank will determine the force increase, this can be calculated using the formula shown below:

When using expansion tanks, the S24 hose system must be used (see pages 115 - 122).

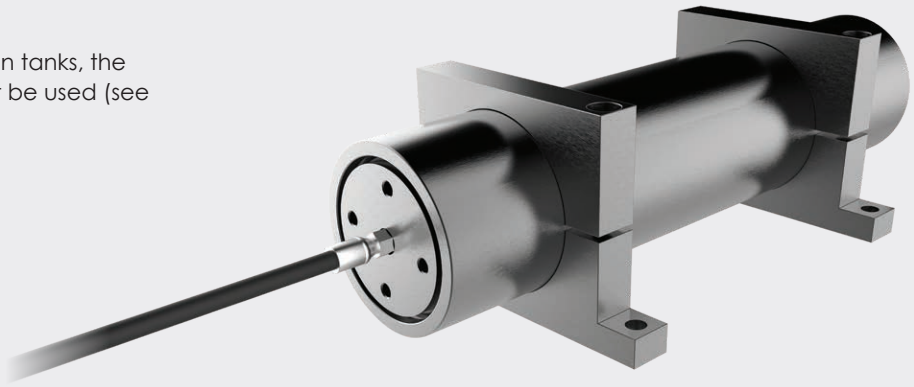

EXPANSION TANK SIZES

Part Number	Diameter (ØD) (mm) *(in.)*	Length (A) (cm)	Volume (cm3)
TANK-EXP-075-(A)	**Ø75 -** *2.95*	**XXX**	**= 31.50 x (A - 5)**
TANK-EXP-095-(A)	**Ø95 -** *3.74*	**XXX**	**= 50.24 x (A - 5)**
TANK-EXP-120-(A)	**Ø120 -** *4.72*	**XXX**	**= 78.50 x (A - 5)**
TANK-EXP-150-(A)	**Ø150 -** *5.91*	**XXX**	**= 122.60 x (A - 5)**

Ordering example: Tank-Exp-075-300-100

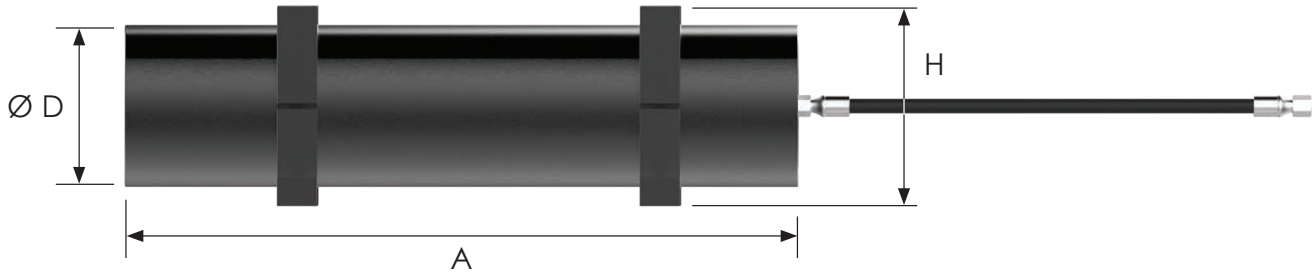

Example: Ve=N((AxSxFi/(Fi-1)) – V1)

Ve = Expansion tank volume
N = Number of springs
A = Area of piston rod (cm2)
S = Effective stroke used
Fi = Force increase
V1 = Initial volume of each cylinder (cm3)

FIXING CLAMPS (See page 92 for full range)

Expansion Tanks	Fixing Clamps	Height (H) (mm) *(in.)*
TANK-EXP-075	**>ES075**	**105** *4.13*
TANK-EXP-095	**>ES095**	**125** *4.92*
TANK-EXP-120	**>ES120**	**148** *5.83*
TANK-EXP-150	**>ES150**	**200** *7.87*

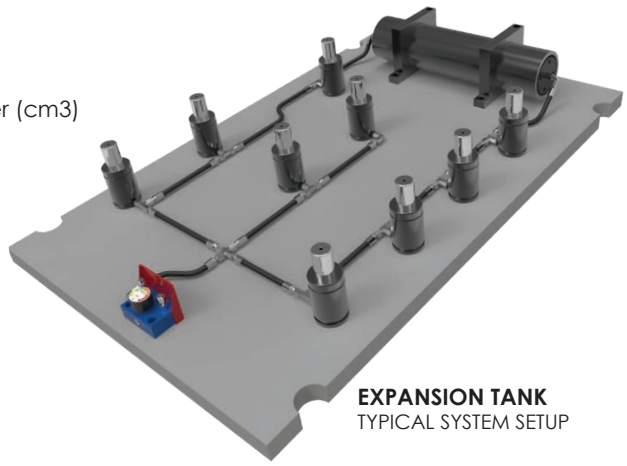

EXPANSION TANK
TYPICAL SYSTEM SETUP

GAS SPRING SERVICING ACCESSORIES

GAS SPRING TEST STANDS	PAGE 131
GAS SPRING SERVICE KIT	PAGE 131
GAS SPRING CHARGING	PAGE 132
NITROGEN BOOSTER UNITS	PAGE 133
TOOL KIT & ACCESSORIES	PAGE 134

To check that a gas spring is at the correct force, a test stand should be used. Testing in any other way could be dangerous and cause a safety issue.

Designed to measure the initial gas spring force with an accurate easy to read digital display.

MET: 8220
BENCH MOUNTED TEST STAND

10t bench test stand with digital display.

For use with lower tonnage gas springs and short stroke full height springs. Maximum gas spring height 280mm.

MET: 8223
FLOOR MOUNTED TEST STAND

20t floor test stand with digital display.

For use on all gas spring types including high tonnage and long strokes.

MET8220

MET8223

Gas spring force should be checked with a test stand only!

NITRO-SPRING SERVICE KITS

Kit includes:

- Complete seal unit.
- Retaining Clip & Dust Seal.
- Grease.
- Oil Bottle.
- Plug & Valve.

* See gas spring data page for overhaul kit part number.

Only a trained engineer should overhaul a gas spring.

MET: 8101
G1/8 PORT

MET: 8102
M6 PORT

IMPORTANT SAFETY INFORMATION

ONLY TRAINED AND CERTIFIED PERSONS SHOULD ATTEMPT TO CARRY OUT MAINTENANCE WORK ON GAS SPRINGS.

MET: 8221
63 DIAMETER MANOMETER

MET: 8222
48 DIAMETER MANOMETER

MET: 8204
MALE CHARGE FITTING

MET: 8200
HOSE & SHUT OFF VALVE

MET: 8201
REGULATOR

MET: 8202
CHARGE UNIT - G1/8

MET: 8205
FEMALE CHARGE FITTING

MET: 8206
M6 CHARGE ADAPTOR

MET: 8208
M8 CHARGE ADAPTOR

MET: 8210
BLEED VALVE

NITROGEN BOOSTER UNITS

Designed to maximise and utilise the full bottle of Nitrogen when charging gas springs and gas spring systems.

With gas springs requiring a charge pressure of 150bar on standard springs and up to 200 bar on mini springs, nitrogen bottles with a nominal pressure of 230 or 300 bar do not last long. When the nitrogen bottle pressure drops below 150 bar the bottle must be changed for a new one, this can be wasteful and expensive. The booster unit will allow the bottle pressure to fall to 5bar whilst maintaining an output flow up to 200 bar, thus utilising the full bottle.

Two options are available: the single acting or double acting booster unit. Selection should be based upon the level and frequency that gas springs are charged.

MET: 8320 SINGLE ACTING BOOSTER UNIT

DIMENSIONS:
46.4 X 36.6 X 17.6CM
18.3 X 14.4 X 6.93"

Minimum air pressure required: 5bar

Recommended for regular charging of gas springs and pipe systems.

MET: 8321 DOUBLE ACTING BOOSTER UNIT

DIMENSIONS:
55 X 48 X 73CM
21.7 X 18.9 X 28.7"

Minimum air pressure required: 5bar

Recommended for regular charging of high volume gas springs and large pipe systems.

MET: 8216 GAS SPRING TOOL KIT

Provides all necessary equipment to overhaul and maintain Nitro-Springs.

MET: 8006 DEGASSING TOOL M6 & G1/8

MET: 8005 M6 VALVE TOOL

T-BAR: MET: 9005 - M6 MET: 8017 - M8

MET: 8009 CONTROL PANEL DEGASSING TOOL

MET: 8206 M6 CHARGE ADAPTER

MET: 8205 FEMALE CHARGE FITTING

MET: 8217 LEAK DETECTOR SPRAY

MET: 8003 CLIP REMOVING TOOL

MET: 8000 SEAL UNIT DEPRESSOR

Nitrogen Cylinder Sketch

2734 Banning Road
Cincinnati, OH 45239
Ph: (513) 923-3777
Fax: (513) 923-1111

PORTER PRECISION PRODUCTS

Blank Nitrogen Cylinder

Porter@PorterPunch.com or Georgia@PorterPunch.com

660 James Road
Alpharetta, GA 30004
Ph: (770) 751-7234
Fax: (770) 751-7238

ENDVIEW #1

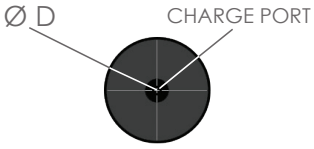

ENDVIEW #2

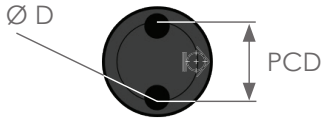

ENDVIEW #3

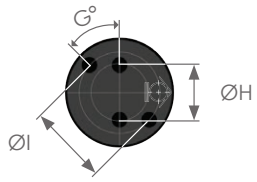

ENDVIEW #4

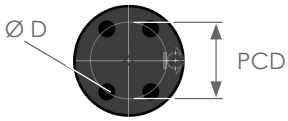

ENDVIEW #5

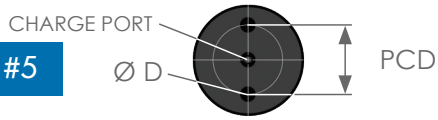

ENDVIEW #6

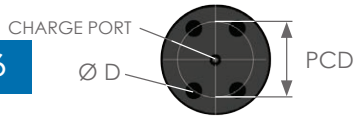

P=		L "MIN"=		PCD=	
L=		STROKE=		D=	
B=		ENDVIEW #=		I=	

PCD= Center line distance for 2 hole mount. Diameter for 4 hole mount

Company Name	Contact Info			Tool #	Part #/ Det #	
Body Dia "B"	Overall Length "L"	Piston Rod Diameter "P"	"L" Min	"E"	Stroke	Charge pressure
Notes and or other Alteration requests						

Qty

HOT STAMP
GAS SPRING RANGE

TRI-SCRAPER AND DUAL SCRAPER SYSTEMS
ULTIMATE SEAL PROTECTION

- Removes all contaminates from small dust particles to larger metal fragments
- Combination of wipe materials for increased effectiveness
- Resistant to damage from metal debris
- Flexible with side loading
- High temperature seals
- Long life in high temperature environments

SPECIALLY DESIGNED PISTON RODS

- High corrosion resistance
- Low friction coefficiency
- Withstands exceptional loads and wear
- High impact resistance
- High abrasion resistance

CONTACT US FOR A CATALOG
(770) 751-7234

OR YOU CAN DOWNLOAD IT HERE:

https://www.porterpunch.com/hot-stamp-catalog

Corporate Office & Manufacturing Plant
2734 Banning Rd.
Cincinnati, Ohio 45239
Ph: (513) 923-3777
Fax: (513) 923-1111
Toll Free (800) 543-7041
Porter@porterpunch.com

Georgia Manufacturing Plant
660 James Rd.
Alpharetta, GA 30004
Ph: (770) 751-7234
Fax: (770) 751-7238
Toll Free: (800) 437-5185
Georgia@porterpunch.com

Canada Plant
30 Duke Street West
Suite #503
Kitchener, Ontario, Canada N2H 3W5
Ph: (519) 746-3130
Fax: (519) 746-6960
Toll Free: 1-800-265-8844
Canada@porterpunch.com